ANSI/UL1479 (ASTM E814)	CAN/ULC S115
F Ratings — 1 or 2 Hr (See Item 1)	F Ratings — 1 or 2 Hr (See Item 1)
T Ratings — 1 or 1-1/2 Hr (See Item 1)	FT Ratings — 1 or 1-1/2 Hr (See Item 1)
L Rating At Ambient — Less Than 1 CFM/ft^2	FH Ratings — 1 or 2 Hr (See Item 1)
L Rating At 400 F — Less Than 1 CFM/ft^2	FTH Ratings — 1 or 1-1/2 Hr (See Item 1)
W Rating — Class 1 (See Item 2B)	L Rating At Ambient — Less Than 5.1 L/s/m^2
	L Rating At 204 C — Less Than 5.1 L/s/m^2

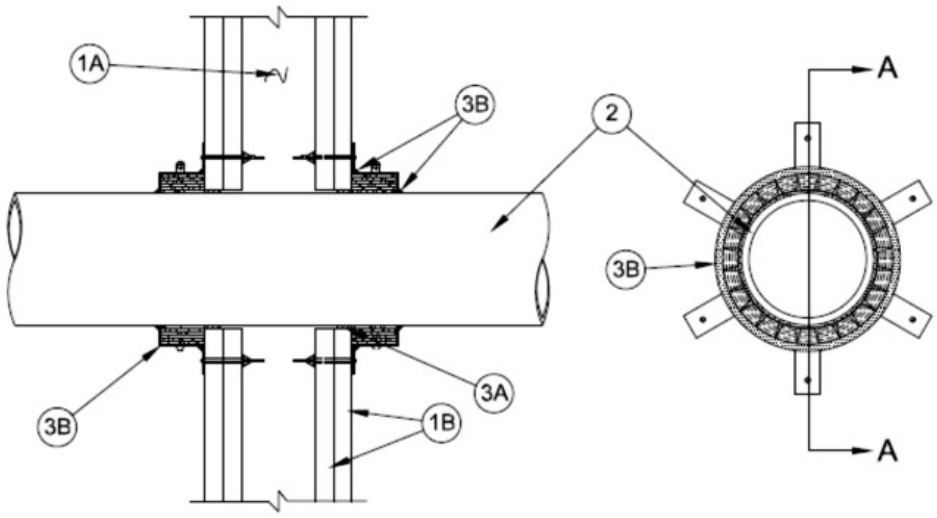

Section A-A

System tested with a pressure differential of 2.5 Pa between the exposed and the unexposed surfaces with the higher pressure on the exposed side.

1. **Wall Assembly —** The 1 or 2 hr fire rated gypsum board/stud wall assembly shall be constructed of the materials and in the manner specified in the individual U400, V400 or W400 Series Wall and Partition Designs in the UL Fire Resistance Directory and shall include the following construction features:

A. **Studs —** Wall framing shall consist of min 3-1/2 in. (89 mm) wide steel channel studs spaced max 24 in. (610 mm) OC.

B. **Gypsum Board* —** Thickness, type, number of layers and fasteners as required in the individual Wall and Partition Design. Max diam of opening is 5 in. (13 mm).

The hourly F and FH Ratings are equal to the hourly rating of the wall assembly. The hourly T, FT and FTH ratings are 1 and 1-1/2 hr for 1 and 2 hr rated assemblies, respectively.

2. **Through Penetrants —** Nom 4in. (102 mm) diam (or smaller). Schedule 40 solid core PVDF pipe for use in closed (process or supply) or vented (drain, waste or vent) piping systems. Pipe to be installed either concentrically or eccentrically within the firestop system. The annular space between the pipe and periphery of opening shall be min 0 in. (point contact) to max 1/2 in. (13 mm). Pipe to be rigidly supported on both sides of wall assembly.

3. **Firestop System —** The firestop system shall consist of the following:

A. **Fill, Void or Cavity Materials * - Caulk —** (Optional, Required or air leakage) Min thickness of 1/2 in. (13 mm) of caulk applied within annulus, flush with both surfaces of wall assembly.

RECTORSEAL — Biostop 150+, 350i, 500+, 700, 750, Metacaulk 150+, Metacaulk 1200, FlameSafe FS3000, FS4000, FS1900, FS900

Air leakage rating only applies when Item 3A is used.

The T rating is 1-1/2 only when Item 3A is used.

B. **Fill, Void or Cavity Material* - Wrap Strip —**Layers of nom 1/4 in. (6 mm) thick by 2 in. (51 mm) wide intumescent wrap strip individually wrapped around the outer circumference of the pipe such that wrap strip is flush with both surfaces of wall. Butted ends in successive layers shall be offset. Wrap strip secured with tape, wire or tie wire. Three layers are to be used

for nom 4 in. (102 mm) diam pipe two layers for nom 3 in. (76 mm) diam Pipe and one layer for nom 2 in. (51 mm) diam pipe
RECTORSEAL — Biostop Wrap Strip or FlameSafe Wrap Strip

C. **Steel Collar —** Collar fabricated from coils of precut min 0.016 in. thick (No. 28 gauge) galv steel available from fill material manufacturer. Collar shall be nom 2 in. (51 mm) deep with 1 in.(25 mm) wide by 1-1/2 in. (38 mm) long anchor tabs on 4 in. (102 mm) centers to secure to both surfaces of wall. In addition, collar contains retainer tabs, 1/2 in. (13 mm) wide by 3/4 in. (19 mm) long, located opposite the anchor tabs. Collar shall be wrapped over the wrap strip, overlapping min 1 in. The retainer tabs are folded 90 deg towards the pipe to maintain the annular space around the pipe and to retain the wrap strip. Collar secured to both surfaces of wall at each anchor tab by means of 3/16 in. diam by 3 in. (5 by 76 mm) long steel hollow wall anchors in conjunction with 1/4 in. by 5/8 in. (6 by 16 mm) diam washers.

D. **Firestop Device* —** (As an alternate to Items 3B and 3C) Galv steel collar lined with an intumescent material sized to fit specific diam of the through penetrant. Device to be installed around through penetrant in accordance with accompanying installation instructions. Device incorporates anchor tabs for securement to both surfaces of the wall by means of 3/16 in. diam by 3 in. (5 by 76 mm) long steel hollow wall anchors.
RECTORSEAL — Biostop Pipe Collar or FlameSafe Pipe Collar

+

*,+ Indicates such products shall bear the UL or cUL Certification Mark for jurisdictions employing the UL or cUL Certification (such as Canada), respectively.

Reprinted from the Online Certifications Directory with permission from UL. ©UL LLC