F Rating — 1 Hr
T Rating — 3/4 Hr

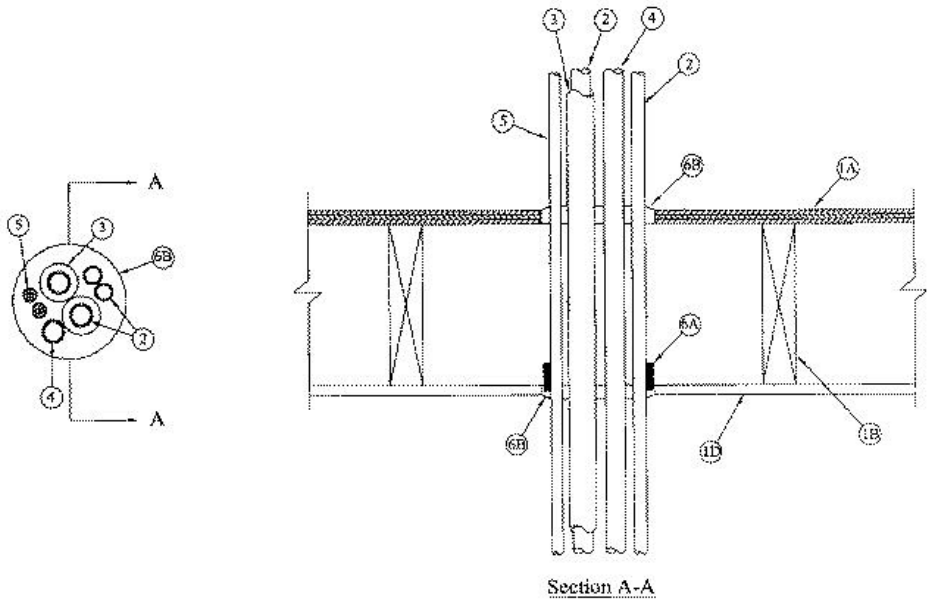

1. **Floor-Ceiling Assembly —** The fire-rated solid or trussed lumber joist floor-ceiling assembly shall be constructed of the materials and in the manner specified in individual L500 Series Floor-Ceiling Designs in the UL Fire Resistance Directory. The general construction details of floor-ceiling assembly are summarized below:

A. **Flooring System —** Lumber or plywood subfloor with finish floor of lumber, plywwod or **Floor Topping Mixture*** as specified in the individual Floor-Ceiling Design. Max diam of floor opening 4-1/2 in. (114 mm).

B. **Wood Joists —** Nom 2 by 10 in. (51 by 254 mm) lumber joists spaced 16 in. OC with nom 1 by 3 in. (25 by 76 mm) lumber bridging and with ends firestopped. As an alternate to lumber joists, nom 10 in. deep (or deeper) lumber, steel or combination lumber and steel joists, trusses or **Structural Wood Members*** with bridging as required with ends firestopped.

C. **Furring Channels —** (Not Shown) — Resilient galv steel furring installed perpendicular to wood joists (Item 1B) between wallboard (Item 1D) and wood joists or furring channels as required in the individual Floor-Ceiling Design.

D. **Gypsum Board* —** Nom 4 ft. (1.2 m) wide by 5/8 in. (16 mm) thick as specified in the individual Floor-Ceiling Design. Wallboard secured to wood joists or furring channels as specified in the individual Floor-Ceiling Design. Max diam of ceiling opening is 4-1/2 in (114 mm).

1.1 **Chase Wall —** (Optional, not shown) The through penetrants (Items 2, 4, and 5) may be routed through a 1 hr fire rated single, double or staggered wood stud/gypsum wallboard chase wall constructed of the materials and in the manner specified in the individual U300 Series Wall and Partition Designs in the UL Fire Resistance Directory and shall have the following construction details:

A. **Studs —** Nom 2 by 6 in. (51 by 152 mm) or double nom 2 by 4 in. (51 by 102 mm) lumber studs.

B. **Sole Plate —** Nom 2 by 6 in. (51 by 152 mm) or parallel 2 by 4 in. (51 by 102 mm) lumber plates, tightly butted.

C. **Top Plate —** The double top plate shall consist of two nom 2 by 6 in. (51 by 152 mm) or two sets of parallel 2 by 4 in. (51 by 102 mm) lumber plates tightly butted. Max diam of opening is 4-1/2 in. (114 mm).

D. **Gypsum Board* —** Thickness, type , number of layers and fasteners shall be as specified in individual Wall and Partition Design.

2. **Through Penetrants —** One or more metallic pipes, conduits or tubing to be installed within the firestop system. Pipes, conduits or tubing to be spaced a min 1/8 in. (3.2 mm) to a max 1/2 in. (13 mm) from the other penetrants (Item 3, 4 and 5). The space between the pipes, conduits or tubing and the periphery of the opening shall be a min 1/4 in. (6 mm) to a max 1/2 in. (13 mm). Pipes, conduits or tubing to be rigidly supported on both sides of floor-ceiling assembly. The following types and sizes of metallic pipes, conduits or tubing may be used:

A. **Steel Pipe —** Nom 3/4 in. (19 mm) diam (or smaller) Schedule 10 (or heavier) steel pipe.

B. **Conduit —** Nom 3/4 in. (19 mm) diam (or smaller) steel electrical metallic tubing or galv steel conduit

C. **Copper Tubing —** Nom 3/4 in. (19 mm) diam (or smaller) Type L (or heavier) copper tubing.

D. **Copper Pipe —** Nom 3/4 in. (19 mm) diam (or smaller) Regular (or heavier) copper pipe.

3. **Tube Insulation-Plastics# —** Nom 3/4 in. (19 mm) thick acrylonitrile butadiene/polyvinyl chloride (AB/PVC) flexible foam furnished in the form of tubing. Tube insulation to be installed on a one or more of the metallic pipes or tubing. Insulated pipes or tubing shall be spaced a min 1/4 in. (6 mm) to a max 1/2 in. (13 mm) from the other through- penetrants (Items 2, 4, and 5). The space between insulated through penetrants and periphery of opening shall be a min 1/4 in. (6 mm) to a max 1/2 in. (13 mm).

4. **Nonmetallic Through Penetrants —** One nonmetallic pipe or conduit to be installed within the firestop system. Pipe or conduit shall be spaced a min 1/8 in. (3.2 mm) to a max 1/2 in. (13 mm) from the other through penetrants (Item 2, 4 and 6). The annular space between pipe or conduit and the periphery of the opening shall be a min 1/4 in. (6 mm) to a max 1/2 in. (13 mm). Pipe or conduit to be rigidly supported on both sides of the floor-ceiling assembly. The following types and sizes of nonmetallic pipes or conduits may be used:

A. **Polyvinyl Chloride (PVC) Pipe —** Nom 1-1/4 in. (32 mm) diam (or smaller) Schedule 40 solid core PVC pipe for use in closed (process or supply) or vented (drain, waste or vent) piping system.

B. **Rigid Nonmetallic Conduit+ —** Nom 1-1/4 in. (32 mm) diam (or smaller) Schedule 40 PVC conduit installed in accordance with the National Electrical Code (NFPA No. 70).

C. **Chlorinated Polyvinyl Chloride (CPVC) Pipe —** Nom 1-1/4 in. (32 mm) diam (or smaller) SDR17 CPVC pipe for use in closed (process or supply) or vented (drain, waste or vent) piping systems.

5. **Cables —** Two, 7/C No. 12 AWG (or smaller) cable with PVC - nylon insulation and PVC jacket materials. Cables to be spaced a min 1/8 in. (3.2 mm) to a max 1/2 in. (13 mm) from the other through-penetrants (Items 2, 3 and 4). The annular space between the cable and periphery of opening shall be a min 1/4 in. (6 mm) into a max 1/2 in. (13 mm). Cables to be rigidly supported on both sides of floor-ceiling assembly.

6. **Firestop System —** The firestop system shall consist of the following:

A. **Fill, Void or Cavity Materials* — Wrap Strip —** Nom 1/4 in. (6 mm) thick intumescent material faced on both sides with a plastic film, supplied in 1 in. (25 mm) wide strips. Nom 1 in. (25 mm) wide strip tightly-wrapped around outer group of penetrants and at its egress from the bottom surface of ceiling or lower top plate of chase wall assembly with ends butted and held together with masking tape. The bottom edge of wrap strip shall be recessed a nom 3/8 in (10 mm) from the bottom surface of ceiling or lower top plate of chase wall assembly.
RECTORSEAL — FlameSafe Wrap Strip, Metacaulk Wrap Strip or Biostop Wrap Strip

B. **Fill, Void or Cavity Material* — Sealant —** Min 3/4 in. (19 mm) thickness of fill material applied within annulus, flush with top surface of floor. Min 3/8 in. (10 mm) thickness of fill material applied within annulus on bottom surface of ceiling or lower top plate of chase wall assembly. On both the top and bottom of the assembly, fill material forced into interstices within group of penetrating items to max extent possible and a min 1/4 in. (6 mm) thick crown of fill material applied around the group of penetrants.
RECTORSEAL — FlameSafe FS 1900, FS1901, FS1905,FS1929, Metacaulk 1000, Metacaulk 350i, Biostop 350i or Biostop 500+

#Bearing the UL Recognized Component Mark

*,+ Indicates such products shall bear the UL or cUL Certification Mark for jurisdictions employing the UL or cUL Certification (such as Canada), respectively.

Reprinted from the Online Certifications Directory with permission from UL. ©UL LLC