F Ratings - 1, 1-1/2, 2 and 3 Hr (See Item 2)
T Ratings - 0, 1/2, 3/4, 1-1/2 and 3 Hr (See Item 2)

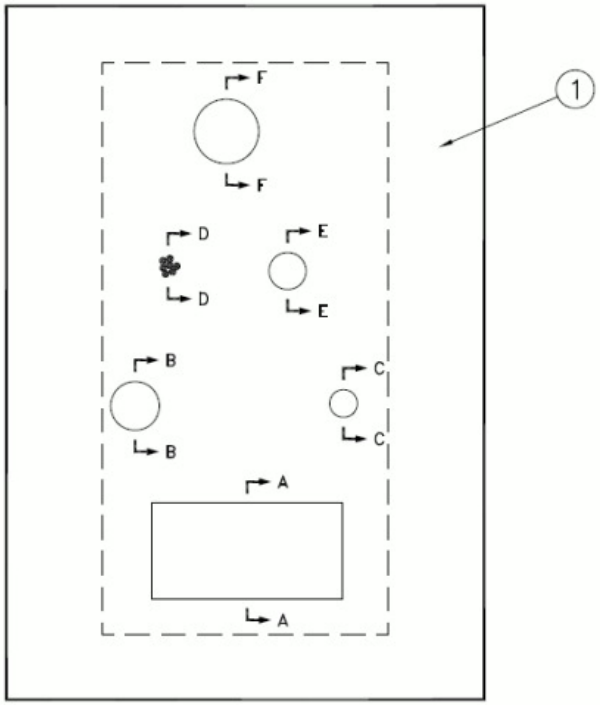

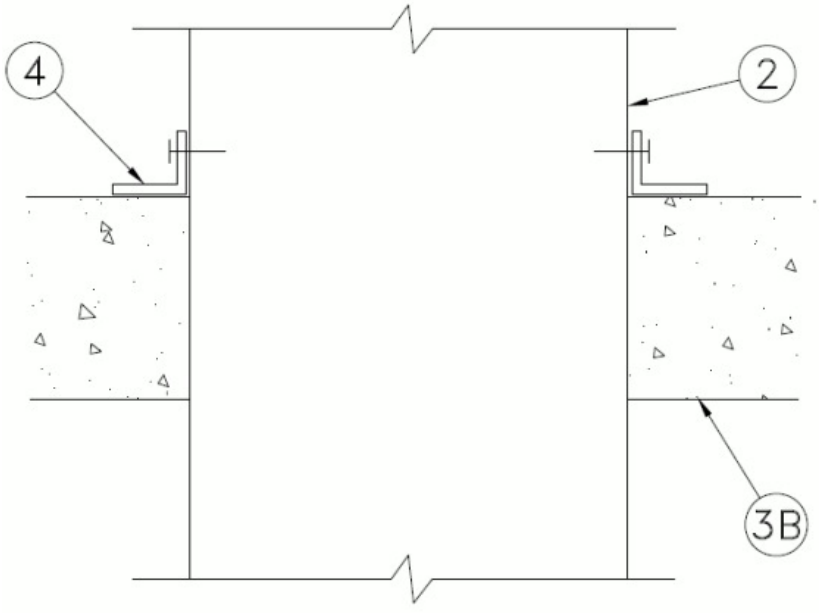

SECTION A–A

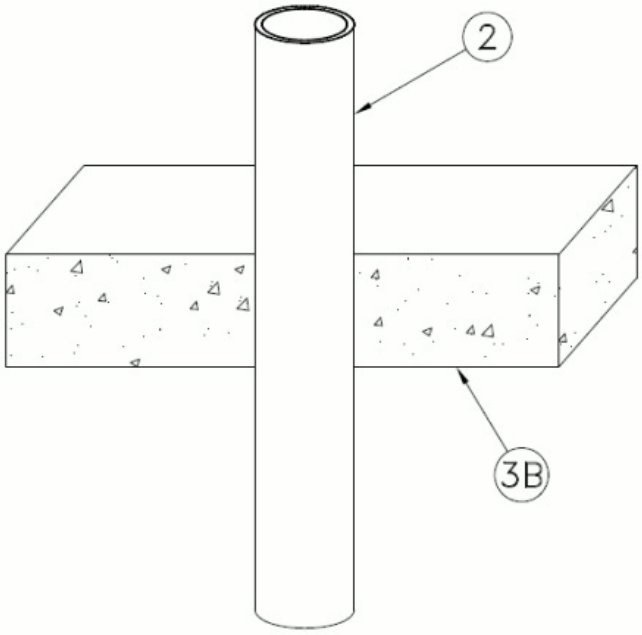

SECTION B–B

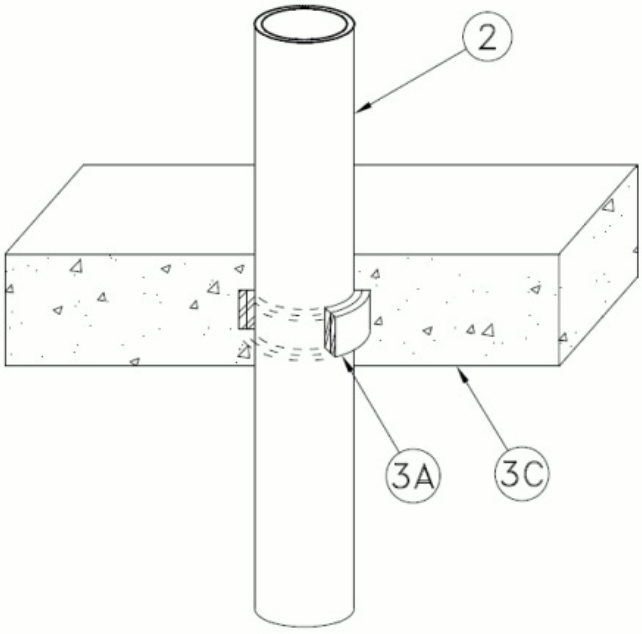

SECTION C–C

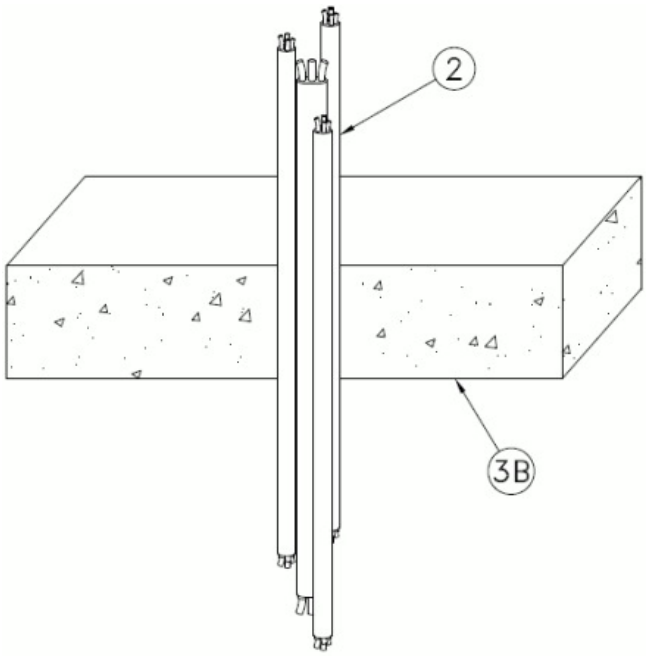

SECTION D–D

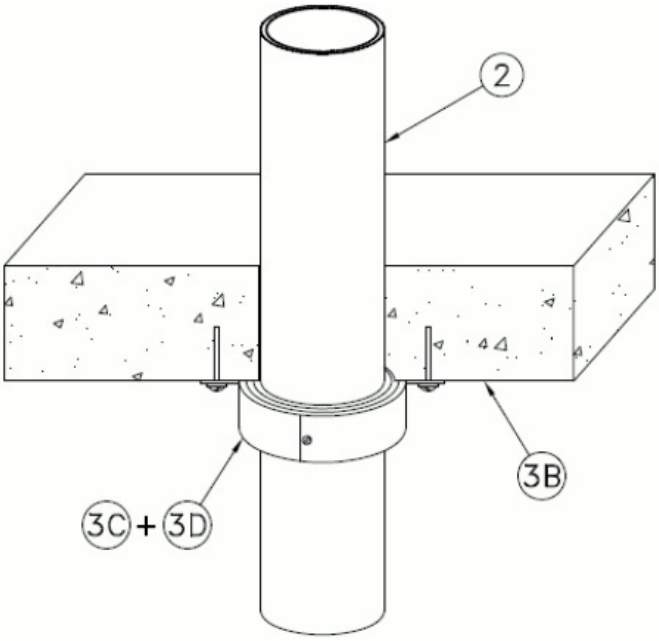

SECTION E–E

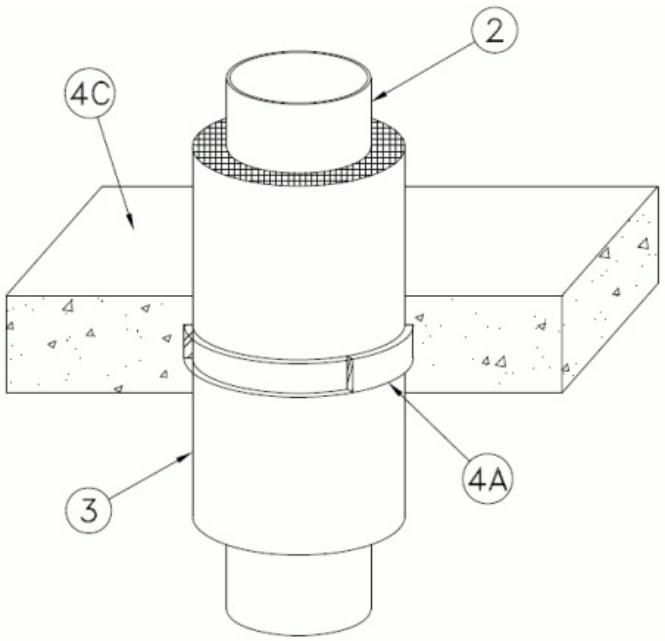

SECTION F–F

1. **Floor or Wall Assembly —** Min 4-1/2 in. (114 mm) thick reinforced light weight or normal weight (100150 pcf or 1600-2400 kg/m3) concrete. Wall may also be constructed of any UL Classified **Concrete Blocks***. Max area of opening is 18 sq ft. (1.7 m2) with max dimension of 6 ft (1.8 m).

See **Concrete Blocks** (CAZT) in the Fire Resistance Directory for names of manufacturers.

2. **Through Penetrants —** A max of 6 different firestop configurations may be installed within the opening. The space between firestop configurations shall be min 4 in. (102 mm) to max 18 in. (457 mm). The space between firestop configurations and periphery of opening shall be min 1 in. (25 mm). Pipe, conduit, tubing, duct, or cable bundle to be rigidly supported on both sides of floor or wall assembly. The F and T ratings of the system are dependent on the firestop configuration, as shown in the table below. **Any combination of the following firestop configurations detailed herein and amounting to a total of 9 may be used:**

Firestop Configuration	F Rating, Hr	T Rating, Hr
A	2	0
B	2	0
C	3	0 and 3 (See Below)
D	2	1/2
E	1-1/2	1-1/2
F	1 and 2 (See below)	1/2 and 3/4 (See below)

When "Configuration B" is installed independently of any of the other configurations, any number and combination of the specified noncombustible pipes may be used within the stated maximum opening area provided the annular spaces between the pipes are min 2 in. (51 mm) and between pipes and periphery of the opening are min 1 in. (25 mm). When a combination of the different firestop configurations is used, the combined F and T ratings of the system shall be the least F and T ratings of the firestop configurations used.

Firestop Configuration A

2. **Steel Duct —** Nom 24 by 12 in. (610 by 305 mm) min No. 24 gauge (or heavier) galv steel duct. One steel duct to be positioned within this firestop configuration.

3. **Firestop System —** The firestop system shall consist of the following:

A. **Forms —** (Not Shown) - Used as a form to prevent leakage of mortar during installation. Forms to be a rigid sheet material, cut to fit the contour of the penetrating item and fastened to the underside of floor or both sides of wall. Forms may be removed after mortar has cured.

B. **Fill, Void or Cavity Materials* - Mortar —** Min 4-1/2 in. (114 mm) thickness of mortar applied within the annulus. Cementitious mortar mixed with water at a proportion of 1.1 parts dry mixture to 1.0 part water by weight in accordance with the installation instructions supplied with the product.
RECTORSEAL — FlameSafe Mortar, Metacaulk Fire Rated Mortar of Bio K-10+ Mortar

4. **Steel Retaining Angle —** Nom 2 by 4 in. (51 by 102 mm) min No. 22 gauge (or heavier) steel angles attached to all four sides of the steel duct on the top surface of floor of both surfaces of wall, after the mortar (Item 3B) has set. The angles shall be attached with No. 8 (or larger) steel sheet metal screws spaced max of 2 in. (51 mm) from each end and a max of 8 in. (203 mm) OC.

Firestop Configuration B

2. **Metallic Penetrants —** One metallic pipe, conduit or tubing to be installed within this firestop configuration. The following types and sizes of metallic pipes, conduits or tubing may be used:

A. **Steel Pipe —** Nom 24 in. (610 mm) diam (or smaller) Schedule 40 (or heavier) steel pipe.

B. **Iron Pipe —** Nom 24 in. (610 mm) diam (or smaller) cast or ductile iron pipe.

C. **Conduit —** Nom 4 in. (102 mm) diam (or smaller) steel electrical metallic tubing or nom 6 in. diam (or smaller) steel conduit.

D. **Copper Tubing —** Nom 6 in. (152 mm) diam (or smaller) Type M (or heavier) copper tubing.

E. **Copper Pipe —** Nom 6 in. (152 mm) diam (or smaller) Regular (or heavier) copper pipe.

3. **Firestop System —** The firestop system shall consist of the following:

A. **Forms —** (Not Shown) - Used as a form to prevent leakage of mortar during installation. Forms to be a rigid sheet material, cut to fit the contour of the penetrating item and fastened to the underside of floor or both sides of wall. Forms may be removed after mortar has cured.

B. **Fill, Void or Cavity Materials* - Mortar —** Min 4-1/2 in. (114 mm) thickness of mortar applied within the annulus. Cementitious mortar mixed with water at a proportion of 1.1 parts dry mixture to 1.0 part water by weight in accordance with the installation instructions supplied with the product.
RECTORSEAL — FlameSafe Mortar, Metacaulk Fire Rated Mortar of Bio K-10+ Mortar

Firestop Configuration C

2. **Nonmetallic Penetrants —** One nonmetallic pipe or conduit to be installed within this firestop configuration. The following types and sizes of pipes or conduits may be used:

A. **Polyvinyl Chloride (PVC) Pipe —** Nom 3 in. (76 mm) diam (or smaller) Schedule 40 cellular or solid core PVC pipe for use in closed (process or supply) or vented (drain, waste, or vent) piping systems.

B. **Rigid Nonmetallic Conduit (RNC)+ —** Nom 3 in. (76 mm) diam (or smaller) Schedule 40 PVC conduit installed in accordance with the National Electrical Code (NFPA No. 70).

C. **Chlorinated Polyvinyl Chloride (CPVC) Pipe —** Nom 3 in. (76 mm) diam (or smaller) SDR17 CPVC pipe for use in closed (process or supply) piping systems.

3. **Firestop System —** The firestop system shall consist of the following:

A. **Fill, Void or Cavity Materials* - Wrap Strip —** Nom 1/4 in. (6 mm) thick intumescent material faced on both sides with a plastic film, supplied in 1-1/2 in. (38 mm) wide strips. One layer of wrap strip shall be used for pipe or conduit of nom diam of 2 in. (51 mm) or less. For pipe or conduit of nom diam of 2-1/2 and 3 in. (64 and 76 mm), two layers of wrap strips shall be used. The wrap strips are individually wrapped around the through-penetrant with the ends butted and held in place with masking tape. Butted ends in successive layers shall be offset. The wrap strips shall be recessed by a min of 1-1/2 in. (38 mm) from both mortar surfaces (Item 3C) of floor or wall. Wrap strips to be installed prior to the installation of the mortar (Item 3C).
For 2 in. (51 mm) diam pipe, the T Rating is 3 Hr. For 2-1/2 and 3 in. (64 and 76 mm) diam pipe, the T Rating is 0 Hr.

RECTORSEAL — FlameSafe® Wrap Strip, Metacaulk Wrap Strip or Biostop Wrap Strip

B. **Forms —** (Not Shown) - Used as a form to prevent leakage of mortar during installation. Forms to be a rigid sheet material, cut to fit the contour of the penetrating item and fastened to the underside of floor or both sides of wall. Forms may

be removed after mortar has cured.

C. **Fill, Void or Cavity Materials*- Mortar —** Min 4-1/2 in. thickness of mortar applied within the annulus. Cementitious mortar mixed with water at a proportion of 1.1 parts dry mixture to 1.0 part water by weight in accordance with the installation instructions supplied with the product.
RECTORSEAL — FlameSafe Mortar, Metacaulk Fire Rated Mortar of Bio K-10+ Mortar

Firestop Configuration D

2. **Cables —** One max 3 in. (76 mm) diam bundle of cables to be installed within this firestop configuration. The following types of cables may be bundled together:

A. Max RG59/U (or smaller) coaxial cable with fluorinated ethylene insulation and jacket.

B. Max 7/C - No. 16 AWG cables with polyvinyl chloride (PVC) insulation and jacket.

C. Max 12 fiber 62.5/125 mm, Type OFNER optical fiber cable with PVC insulation and jacket.

D. Max 3/C No. 2/0 AWG (or smaller), aluminum or steel jacketed metal-clad or armored cable.

E. Max 1/C No. 350 MCM cable with XLPE insulation and jacket.

3. **Firestop System —** The firestop system shall consist of the following:

A. **Forms —** (Not Shown) - Used as a form to prevent leakage of mortar during installation. Forms to be a rigid sheet material, cut to fit the contour of the penetrating item and fastened to the underside of floor or both sides of wall. Forms may be removed after mortar has cured.

B. **Fill, Void or Cavity Materials*- Mortar —** Min 4-1/2 in. (114 mm) thickness of mortar applied within the annulus. Cementitious mortar mixed with water at a proportion of 1.1 parts dry mixture to 1.0 part water by weight in accordance with the installation instructions supplied with the product.
RECTORSEAL — FlameSafe Mortar, Metacaulk Fire Rated Mortar of Bio K-10+ Mortar

Firestop Configuration E

2. **Nonmetallic Penetrants —** One nonmetallic pipe or conduit to be installed within this firestop configuration. The following types and sizes of pipes or conduits may be used:

A. **Polyvinyl Chloride (PVC) Pipe —** Nom 4 in. (102 mm) diam (or smaller) Schedule 40 cellular or solid core PVC pipe for use in closed (process or supply) or vented (drain, waste, or vent) piping systems.

B. **Rigid Nonmetallic Conduit+ —** Nom 4 in. (102 mm) diam (or smaller) Schedule 40 PVC conduit installed in accordance with the National Electrical Code (NFPA No. 70).

C. **Chlorinated Polyvinyl Chloride (CPVC) Pipe —** Nom 4 in. (114 mm) diam (or smaller) SDR17 CPVC pipe for use in closed (process or supply) piping systems

3. **Firestop System —** The firestop system shall consist of the following:

A. **Forms —** (Not Shown) - Used as a form to prevent leakage of mortar during installation. Forms to be a rigid sheet material, cut to fit the contour of the penetrating item and fastened to the underside of floor or both sides of wall. Forms may be removed after mortar has cured.

B. **Fill, Void or Cavity Materials*- Mortar —** Min 4-1/2 in. (114 mm) thickness of mortar applied within the annulus. Cementitious mortar mixed with water at a proportion of 1.1 parts dry mixture to 1.0 part water by weight in accordance with the installation instructions supplied with the product.
RECTORSEAL — FlameSafe Mortar, Metacaulk Fire Rated Mortar of Bio K-10+ Mortar

C. **Fill, Void or Cavity Materials* — Wrap Strip — [To be installed when mortar (Item 3B) has hardened.]** Nom 1/4 in. (6 mm) thick intumescent material faced on both sides with a plastic film, supplied in 1 in. (25 mm) wide strips. The layers of wrap strip are individually wrapped around the through-penetrant with the ends butted and held in place with masking tape. Butted ends in successive layers shall be offset. The edge of the wrap strips shall abut the mortar surface (Item 3B) of the floor or wall. In floor assemblies, the wrap strips are installed on the bottom side of the floor. In wall assemblies, the wrap strips are installed on each side of the wall. The number of layers of wrap strips are dependent on the diam of the through-penetrant as tabulated below:

Nom Diam of Through-Penetrant, in. (mm)	Layers of Wrap Strip
4 (102)	3
3 (76)	3
2 (51)	3
1-1/2 (38)	3

RECTORSEAL — FlameSafe® Wrap Strip, Metacaulk Wrap Strip or Biostop Wrap Strip

D. **Steel Collar —** Collar fabricated from coils of precut 0.019 in. (0.46 mm) thick (No. 28 MSG) galvanized sheet steel available from wrap strip manufacturer. Collar shall be nom 1 in. (25 mm) deep with min five 1 in. (25 mm) wide by 2 in. (51 mm) long anchor tabs for securement to the floor or wall. Retainer tabs, 3/4 in. (19 mm) wide tapering down to 1/4 in. (6 mm) wide and located opposite the anchor tabs, are folded 90 degrees towards through-penetrant surface to retain the wrap strips. Steel collar wrapped around wrap strips and through penetrant with a 1 in. (25 mm) wide overlap along its perimeter joint. Steel collar tightened around wrap strips and through penetrant using min 1/2 in. (13 mm) wide by 0.028 in. (0.71 mm) thick stainless steel hose clamp installed at mid-height of the collar. Collar secured to floor surface with 1/4 in. (6 mm) diam by min 2-1/4 in. (57 mm) long steel concrete anchors in conjunction with min 1/4 in. (6 mm) by 1-1/4 in. (32 mm) diam steel fender washers. In wall assemblies, a collar is used on each side of the wall.

Firestop Configuration F

2. **Through-Penetrants —** One metallic pipe or tubing to be installed within this firestop configuration. The following types and sizes of metallic pipes, conduits or tubing may be used:

A. **Steel Pipe —** Nom 6 in. (152 mm) diam (or smaller) Schedule 10 (or heavier) steel pipe.

B. **Iron Pipe —** Nom 6 in. (152 mm) diam (or smaller) cast or ductile iron pipe.

C. **Copper Tubing —** Nom 6 in. (152 mm) diam (or smaller) Type L (or heavier) copper tubing.

D. **Copper Pipe —** Nom 6 in. (152 mm) diam (or smaller) Regular (or heavier) copper pipe.

3. **Pipe and Equipment Covering - Materials* —** Nom 2 in. (51 mm) thick hollow cylindrical heavy density (min 3.5 pcf or 56 kg/m^3) glass fiber units jacketed on the outside with an all service jacket. Longitudinal joints sealed with metal fasteners or factory-applied self-sealing lap tape. Transverse joints secured with metal fasteners or with butt tape supplied with the product. Pipe covering material to be installed on pipe or tube.
When 2 in. (51 mm) thick fiber glass units are used, the F and T ratings are 1 and 3/4 h, respectively. When 3 in. (76 mm) thick fiber glass units are used, the F and T Ratings are 2 and 3/4 h, respectively.

See **Pipe and Equipment Covering - Materials** - (BRGU) category in the Building Materials Directory for names of manufacturers. Any pipe covering material meeting the above specifications and bearing the UL Classification Marking with a Flame Spread Index of 25 or less and a Smoke Developed Index of 50 or less may be used.

3A. **Tube Insulation - Plastics+ —** As an alternate to the pipe covering (Item 3) nom 3/4 in. (19 mm) thick acrylonitrile butadiene/polyvinyl chloride (AB/PVC) flexible foam furnished in the form of tubing may be used. Tube insulation to be installed on the metallic pipe or tube.
When this tube insulation is used, the F and T ratings are 2 and 1/2 h, respectively.

See **Plastics+** - (QMFZ2) category in the Recognized Component Directory for names of manufacturers. Any Recognized Component tube insulation material meeting the above specifications and having a UL 94 Flammability Classification of 94-5VA may be used.

4. **Firestop System —** The firestop system shall consist of the following:

A. **Fill, Void or Cavity Materials* - Wrap Strip —** Nom 1/4 in. (6 mm) thick intumescent material faced on both sides with a plastic film, supplied in 1-1/2 in. (38 mm) wide strips. One layer of wrap strip is wrapped around the through-penetrant with the ends butted and held in place with masking tape. The wrap strip shall be installed at mid-depth of floor or wall thickness.
RECTORSEAL — FlameSafe® Wrap Strip, Metacaulk Wrap Strip or Biostop Wrap Strip

B. **Forms —** (Not Shown) - Used as a form to prevent leakage of mortar during installation. Forms to be a rigid sheet material, cut to fit the contour of the penetrating item and fastened to the underside of floor or both sides of wall. Forms may be removed after mortar has cured.

C. **Fill, Void or Cavity Materials*- Mortar —** Min 4-1/2 in. (114 mm) thickness of mortar applied within the annulus. Cementitious mortar mixed with water at a proportion of 1.1 parts dry mixture to 1.0 part water by weight in accordance with the installation instructions supplied with the product.
RECTORSEAL — FlameSafe Mortar, Metacaulk Fire Rated Mortar of Bio K-10+ Mortar

+Bearing the UL Recognized Component Mark.

*,+ Indicates such products shall bear the UL or cUL Certification Mark for jurisdictions employing the UL or cUL Certification (such as Canada), respectively.

Reprinted from the Online Certifications Directory with permission from UL. ©UL LLC