F Rating — 1 Hr
T Rating — 1 Hr

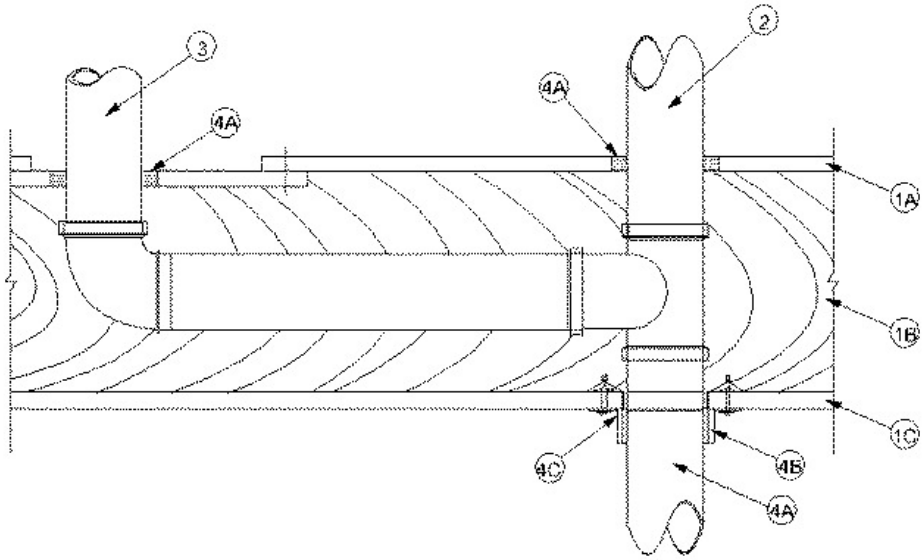

1. **Floor-Ceiling Assembly —** The 1 hr fire-rated solid or trussed lumber joist floor-ceiling assembly shall be constructed of the materials and in the manner specified in the individual L500 Series Floor-Ceiling Designs in the UL Fire Resistance Directory. The general construction features of the floor-ceiling assembly are summarized below:

A. **Flooring System —** Lumber of plywood subfloor with finish floor of lumber plywood or **Floor Topping Mixture*** as specified in the individual Floor-Ceiling Design. Rectangular cutout in flooring to be max 8 by 12 in. Max diam of opening shall be 5 in.

B. **Wood Joists* —** Nom 10 in. deep (or deeper) lumber, steel or combination lumber and steel joists, trusses or **Structural Wood Members*** with bridging as required and with ends firestopped.

C. **Gypsum Board* —** Nom 4 ft wide by 5/8 in. thick as specified in the individual Floor-Ceiling Design. Gypsum board nailed to wood joists. One or two piece 5/8 in. thick gypsum board or 3/4 in. thick plywood patch, min 4 in. longer and wider than the cutout in the flooring, screw-attached to bottom of flooring concentric with cutout by means of 1-1/4 in. long Type S steel screws spaced max 4 in. OC. Max diam of opening hole-sawed through the gypsum board or plywood patch to be 5 in. Max diam of opening in gypsum board ceiling to be 5 in.

1.1. **Chase Wall —** (Optional, not shown) — The through penetrant (Item No. 2) may be routed through a 1 hr fire-rated single, double or staggered wood stud/gypsum wallboard chase wall constructed of the materials and in the manner specified in the individual U300 Series Wall and Partition Designs in the UL Fire Resistance Directory and shall include the following construction features:

A. **Studs —** Nom 2 by 6 in. or double nom 2 by 4 in. lumber studs.

B. **Sole Plate —** Nom 2 by 6 in. or parallel 2 by 4 in. lumber plates, tightly butted. Max diam of opening is 5 in.

C. **Top Plate —** The double top plate shall consist of two 2 by 6 in. or two sets of parallel 2 by 4 in. lumber plates, tightly butted. Max diam of opening is 5 in.

D. **Gypsum Board* —** Thickness, type, number of layers and fasteners shall be as specified in individual Wall and Partition Design.

2. **Through Penetrant —** One nonmetallic pipe to be installed either concentrically or eccentrically within the firestop system. Diam of opening in flooring, top plates and sole plates of optional chase wall shall be 1/2 in. larger than the outside diam of the pipe such that the annular space is min 0 in. (point contact) to max 1/2 in. Pipe to be rigidly supported on both sides of floor-ceiling assembly. The following types and sizes of nonmetallic pipes may be used:

A. **Polyvinyl Chloride (PVC) Pipe —** Nom 4 in. diam (or smaller) Schedule 40 cellular or solid core PVC pipe for use in closed (process or supply) or vented (drain, waste or vent) piping system.

B. **Acrylonitrile Butadiene Styrene (ABS) Pipe —** Nom 4 in. diam (or smaller) Schedule 40 cellular or solid core ABS pipe for use in closed (process or supply) or vented (drain, waste or vent) piping system.

3. **Branch Piping —** (Optional) One nonmetallic pipe connected to through penetrant (Item 2) installed either concentrically or

eccentrically within the opening in subfloor. Diam of opening in flooring shall be 1/2 in. larger than the outside diam of the pipe such that the annular space is min 0 in. (point contact) to max 1/2 in. The following types and sizes of nonmetallic pipes may be used:

A. **Polyvinyl Chloride (PVC) Pipe —** Nom 4 in. diam (or smaller) Schedule 40 cellular or solid core PVC pipe for use in closed (process or supply) or vented (drain, waste or vent) piping systems.

B. **Acrylonitrile Butadiene Styrene (ABS) Pipe —** Nom 4 in. diam (or smaller) Schedule 40 cellular or solid core ABS pipe for use in closed (process or supply) or vented (drain, waste or vent) piping systems.

4. **Firestop System —** The details of the firestop system shall be as follows:

A. **Fill, Void or Cavity Materials* — Caulk —** Min 3/4 in. thickness of caulk applied within annular space around perimeter of through penetrant and branch piping, flush with top surface of floor.
RECTORSEAL — Metacaulk 1000

B. **Fill, Void or Cavity Material* — Wrap Strip —** Nom 1/4 in. thick by 2 in. wide intumescent wrap strip. Two layers of wrap strip are individually wrapped around the through-penetrant with ends butted and held in place with masking tape. Butted ends in successive layer shall be offset. Wrap strip butted tightly against bottom surface of gypsum board ceiling or bottom top plates.
RECTORSEAL — Metacaulk Wrap Strip

C. **Steel Collar —** Collar fabricated from coils of precut min 0.016 in. thick (No. 28 gauge) galv steel available from fill material manufacturer. Collar shall be nom 2 in. deep with 1 in. wide by 1-1/2 in. long anchor tabs on 4 in. centers for securement to bottom surface of gypsum board ceiling by means of 1-1/2 in. long laminate screws or 1/8 in. diameter by 2 in. long hollow wall anchors with 3/4 in. washers at each anchor tab. When chase wall is used, collar to be secured to bottom top plate with min 3/4 in. long No. 10 (or larger) wood screws. In addition, collar contains retainer tabs 1/2 in. wide by 3/4 in. long, located opposite the anchor tabs. Collar shall be wrapped over the wrap strip, overlapping min 1 in. The retainer tabs are folded 90 deg towards the pipe to retain the wrap strip.

D. **Firestop Device* —** (As an alternate to Items 4B and 4C) Galv steel collar lined with an intumescent material sized to fit specific diam of the through penetrant. Device to be installed around through penetrant in accordance with accompanying installation instructions. Device incorporates anchor tabs for securement to underside of ceiling by means of 1-1/2 in. long laminate screws or 1/8 in. diameter by 2 in. long hollow wall anchors with 3/4 in. washers at each anchor tab. When chase wall is used, device to be secured to bottom of top plate with min 3/4 in. long No. 10 (or larger) wood screws.
RECTORSEAL — Metacaulk Pipe Collar

*,+ Indicates such products shall bear the UL or cUL Certification Mark for jurisdictions employing the UL or cUL Certification (such as Canada), respectively.

Reprinted from the Online Certifications Directory with permission from UL. ©UL LLC