July 14, 2026

ANSI/UL 1479	CAN/ULC S115
F Ratings — 1 and 2 Hr (See Item 1)	F Ratings — 1 and 2 Hr (See Item 1)
T Ratings — 1/4 Hr	FT Ratings — 1/4 Hr
L Rating At Ambient - Less Than 1 CFM/sq ft	F Ratings — 1 and 2 Hr (See Item 1)
L Rating At 400 F - Less Than 1 CFM/sq ft	FTH Ratings —1/4 Hr
	L Rating At Ambient - Less Than 1 CFM/sq ft
	L Rating At 400 F - Less Than 1 CFM/sq ft

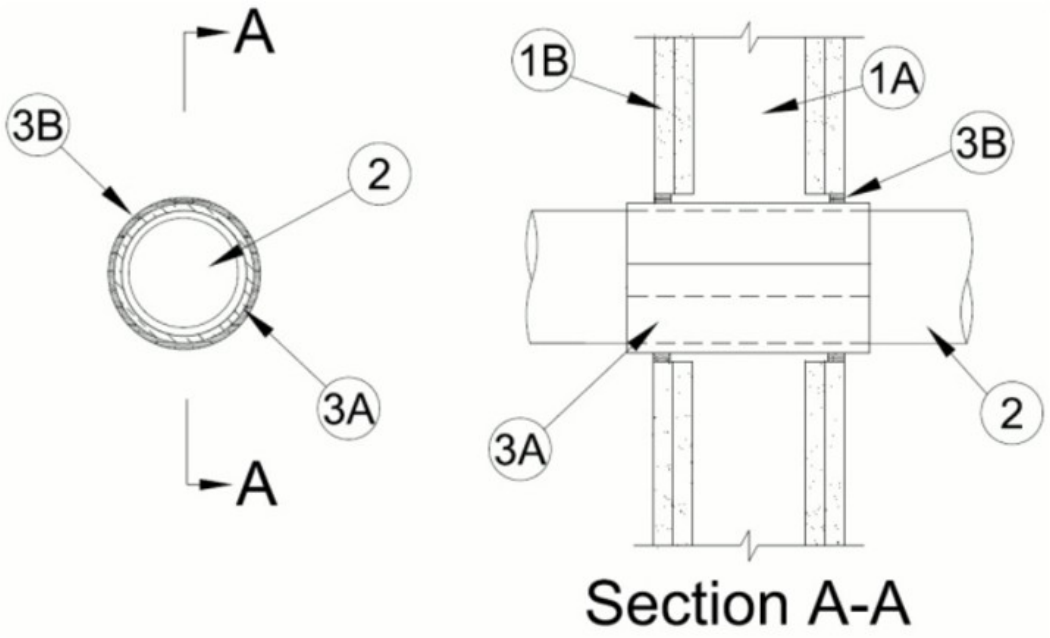

System tested with a pressure differential of 2.5 Pa between the exposed and the unexposed surfaces with the higher pressure on the exposed side. (See Item 2)

1. **Wall Assembly —** The 1 or 2 hr fire-rated gypsum board/stud wall assembly shall be constructed of the materials and in the manner specified in the individual U400, V400 or W400 Series Wall and Partition Designs in the UL Fire Resistance Directory and shall include the following construction features:

A. **Studs —** Wall framing may consist of steel channel studs. Steel studs to be min 3-1/2 in. (89 mm) wide and spaced max 24 in. (610 mm) OC.

B. **Gypsum Board* —** Min. 5/8 in. (16 mm) thick. The gypsum board type, thickness, number of layers, fastener type and sheet orientation shall be as specified in the individual design in the UL Fire Resistance Directory. Max. diameter of opening is 14-1/2 in. (368 mm).

2. **Through Penetrants —** One nonmetallic pipe to be installed concentrically within the firestop system. The nominal annular space shall be 7/8 in. (22 mm), pipe to be rigidly supported on both sides of wall assembly. the following pipe types and sizes can be used:

A. **Polyvinyl Chloride (PVC) Pipe** — Nom 12 in. (305 mm) diam Schedule 40 or SDR41 cellular or solid core PVC or uPVC pipe for use in closed (process or supply) or vented (drain, waste or vent) piping system.

B. **Chlorinated Polyvinyl Chloride (CPVC) Pipe** — Nom 12 in. (305 mm) diam (or smaller) SDR11 CPVC pipe for use in closed (process or supply) or vented (drain, waste or vent) piping systems.

3. **Firestop System —**The firestop system shall consist of the following:

A. **Firestop Device —** Galvanized steel sleeve lined with an intumescent material sized to fit around the pipe. Two intumescent sleeves with an overlap of min ½ in. (13 mm) to be tightly wrapped around outer circumference of pipe. Sleeves are held in place with pop rivets, hose clamps. or tie wire. The device shall be centered within the wall and extend beyond each surface of the wall with a min 2 in. (51 mm) extension.

RECTORSEAL — Metacaulk 68 Intumescent Sleeve

B. **Fill, Void or Cavity Material*** — Sealant — Min 5/8 in. (16 mm) thickness of fill material applied with in the annulus, flush with both surfaces of wall.

RECTORSEAL —Metacaulk 150+

* Indicates such products shall bear the UL or cUL Certification Mark for jurisdictions employing the UL or cUL Certification (such as Canada), respectively.