**F Rating — 1 Hr**
**FT Rating — 3/4 Hr**
**FH Ratings - 0 and 3/4 Hr (See Item 2)**
**FTH Ratings - 0 and 3/4 Hr (See Item 2)**

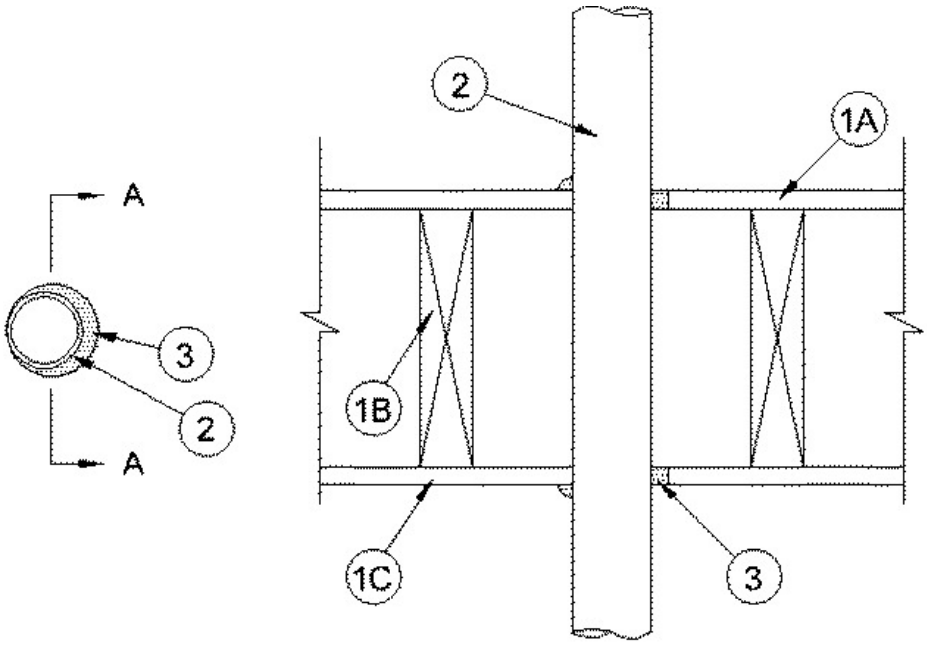


SECTION A-A

System tested with a pressure differential of 50 Pa between the exposed and the unexposed surfaces with the higher pressure on the exposed side.

1. **Floor-Ceiling Assembly —** The 1 hr fire-rated solid or trussed lumber joist floor-ceiling assembly shall be constructed of the materials and in the manner specified in the individual L500 Series Floor-Ceiling Designs in the UL Fire Resistance Directory. The general construction details of the floor-ceiling assembly are summarized below:

A. **Flooring System —** Lumber or plywood subfloor with finish floor of lumber, plywood or **Floor Topping Mixture*** as specified in the individual Floor-Ceiling Design. Max diam of opening shall 76 mm (3 in.).

B. **Wood Joists —** Nom 254 mm (10 in.) deep (or deeper) lumber, steel or combination lumber and steel joists, trusses or **Structural Wood Members*** with bridging as required and with ends firestopped.

C. **Gypsum Board* —** Nom 1219 mm (4 ft) wide by 16 mm (5/8 in.) thick as specified in the individual Floor-Ceiling Design. Max diam of opening shall be 76 mm (3 in.).

1.1 **Chase Wall —** (Optional, not. shown) - The through penetrants (Item No. 2) may be routed through a fire-rated or non fire-rated single, double or staggered wood stud/gypsum board chase wall. When fire-rated the chase wall shall be constructed of the materials and in the manner specified in the individual U300 Series Wall and Partition Designs in the UL Fire Resistance Directory and shall include the following construction features:

A. **Studs —** Single or double nom 51 by 102 mm (2 by 4 in.) or 51 by 152 mm (2 by 6 in.) lumber studs.

B. **Sole Plate —** Nom 51 by 102 (2 by 4 in.), 51 by 152 mm (2 by 6 in.) or parallel 51 by 102 mm (2 by 4 in.) lumber plates, tightly butted. Max diam of opening shall 76 mm (3 in.).

C. **Top Plate —** The single or double top plate shall consist of nom 51 by 102 (2 by 4 in.), 51 by 152 mm (2 by 6 in.) or two parallel 51 by 102 mm (2 by 4 in.) lumber plates, tightly butted. Max diam of opening shall 76 mm (3 in.).

D. **Gypsum Board* —** Thickness, type, number of layers and fasteners shall be as specified in individual Wall and Partition Design.

2. **Through Penetrants —** One nonmetallic pipe or conduit installed eccentrically or concentrically within opening. Annular space between penetrant and periphery of opening to be min 0 mm (0 in., point contact) to max 16 mm (5/8 in.) Penetrant to be rigidly supported on both sides of floor. The following types and sizes of penetrants may be used:

A. **Polyvinyl Chloride (PVC) Pipe —** Nom 38 mm (1-1/2 in.) diam (or smaller) Schedule 40 solid core or cellular core PVC

pipe for use in closed (process or supply) or vented (drain, waste or vent) piping systems. **FH Rating is 1 Hr and FTH Rating is 3/4 Hr.**

B. **XFR Coated Polyvinyl Chloride (PVC) Pipe —** Nom 51 mm (2 in.) diam Schedule 40 solid core XFR coated PVC pipe for use in closed (process or supply) or vented (drain, waste or vent) piping system. **FH Rating is 1 Hr and FTH Rating is 3/4 Hr.**

C. **Rigid Nonmetallic Conduit+ —** Nom 38 mm (1-1/2 in.) diam (or smaller) Schedule 40 PVC conduit installed in accordance with Article 347 of the National Electrical Code (NFPA No. 70). **FH Rating is 1 Hr and FTH Rating is 3/4 Hr.**

D. **Crosslinked Polyethylene (PEX) Tubing —** Nom 38 mm (1-1/2 in.) diam (or smaller) SDR 9 tube used for closed (process or supply) or vented (drain, waste or vent) piping systems. **FH Rating is 1 Hr and FTH Rating is 3/4 Hr.**

E. **Acrylonitrile Butadiene Styrene (ABS) Pipe —** Nom 38 mm (1-1/2 in.) diam (or smaller) Schedule 40 solid core or cellular core ABS pipe for use in closed (process or supply) or vented (drain, waste or vent) piping systems. **FH and FTH Ratings are 0 Hr.**

3. **Fill, Void or Cavity Materials* - Caulk —** Min 19 mm (3/4 in.) thickness of caulk applied within annulus, flush with top surface of floor or sole plate if used. Min 16 mm (5/8 in.) thickness of caulk applied within the annulus, flush with bottom surface of floor or top plate if used. Min 13 mm (1/2 in.) diam bead of caulk applied at point contact locations at penetrant/floor or sole plate interface on top surface of the assembly and at penetrant/ceiling or top plate interface on the bottom surface of the assembly.
**RECTORSEAL** — Metacaulk 1000 or Metacaulk 350i

*,+ Indicates such products shall bear the UL or cUL Certification Mark for jurisdictions employing the UL or cUL Certification (such as Canada), respectively.

Reprinted from the Online Certifications Directory with permission from UL. ©UL LLC