F Rating — 2 Hr
T Rating — 2 Hr
W Rating — Class 1 (See Item 5)

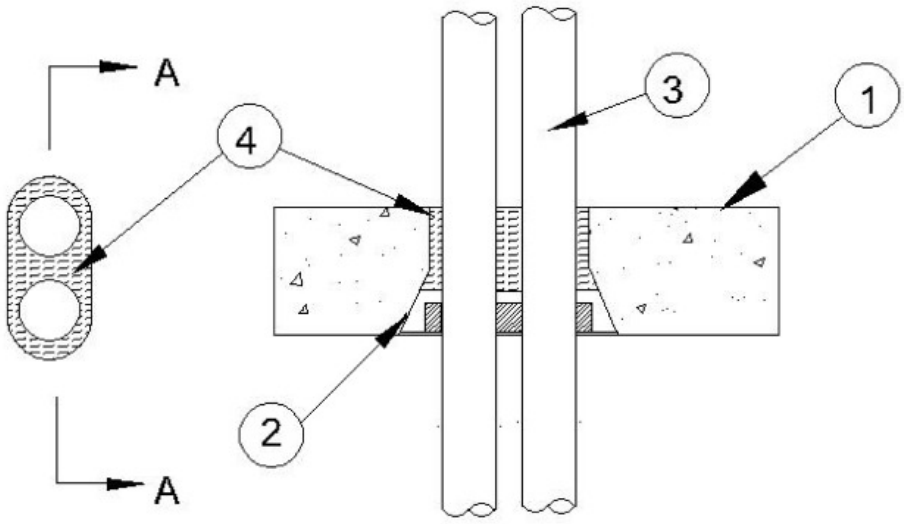

Section A-A

1. **Floor Assembly —** Min 2-1/2 in. (64 mm) thick reinforced lightweight or normal weight (100-150 pcf or 1600-2400 kg/m^3) concrete.

2. **Firestop Device* —** Cast in place firestop device permanently embedded during concrete placement in accordance with accompanying installation instructions. The device may project up to a max of 3-1/2 in. (89 mm) above top surface of floor or trimmed flush with top surface of floor.
RECTORSEAL — Biostop or Rectorseal Cast-In Place Device

3. **Through Penetrants —** One or two nonmetallic pipes installed within the firestop system. Pipe to be rigidly supported on both sides of floor assembly. The nom pipe or conduit size shall be max 2 in. (51 mm). A min 1/2 in. (13 mm) annular space shall be maintained between the penetrants and between the penetrants and the device. The following types of nonmetallic pipes may be used:

A. **Polyvinyl Chloride (PVC) Pipe —** Schedule 40 solid core PVC or cellular core PVC (ccPVC) pipe for use in closed (process or supply) or vented (drain, waste or vent) piping systems.

B. **Chlorinated Polyvinyl Chloride (CPVC) Pipe —** SDR11 CPVC pipe for use in closed (process or supply) piping systems.

C. **Rigid Nonmetallic Conduit (RNC)+ —** Schedule 40 PVC conduit installed in accordance with the National Electrical Code (NFPA 70).

4. **Packing Material —** Min 3 in. (76 mm) thickness of min 4 pcf (64 kg/m^3) mineral wool batt insulation shall be firmly packed into the annular space between the penetrant(s) and device as a permanent form. The packing material is to be installed flush with the top surface of the floor or recessed from the top surface of the device to accommodate the required thickness of caulk (Item 5).

5. **Fill, Void or Cavity Material* — Caulk —** (Optional, Not Shown) - Min 1/4 in. (6 mm) thickness caulk applied within device, flush with top surface of device.
RECTORSEAL — Biotherm 100, Biotherm 200SL.

W Rating only applies when the optional caulk is used.

*,+ Indicates such products shall bear the UL or cUL Certification Mark for jurisdictions employing the UL or cUL Certification (such as Canada), respectively.

Reprinted from the Online Certifications Directory with permission from UL. ©UL LLC