Assembly Ratings - 2 and 3 Hr (See Items B1, 3 and 4)
Nominal Joint Width — 1 and 2 In. (See Item 3)
Class II Movement Capabilities — 25% Compression or Extension
L Rating At Ambient - Less Than 1 CFM/Lin Ft
L Rating At 400 F - Less Than 1 CFM/Lin Ft

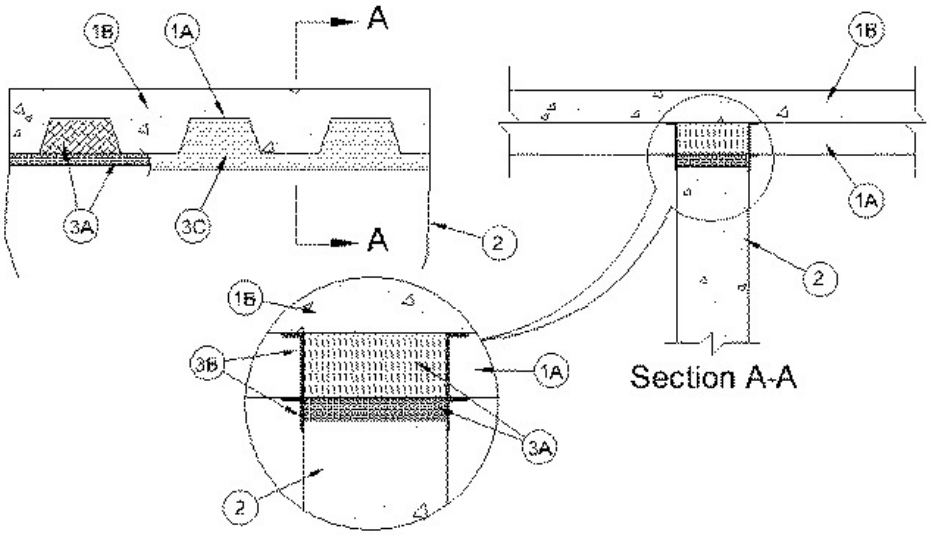

Joint Configuration A

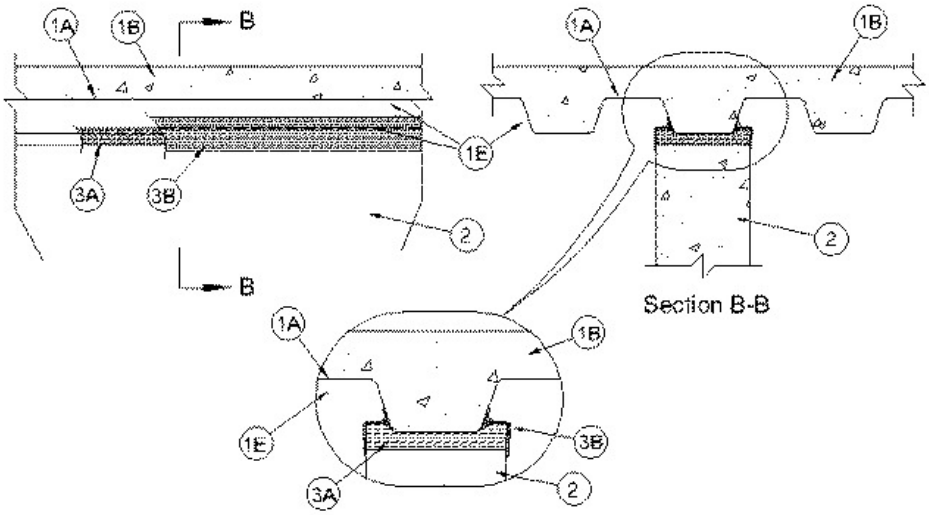

Joint Configuration B

1. **Floor Assembly —** The fire-rated fluted steel deck/concrete floor assembly shall be constructed of the materials and in the manner described in the individual D900 Series Floor-Ceiling Design in the UL Fire Resistance Directory and shall include the following construction features:

A. **Steel Floor and Floor Units* —**Max 3 in. (76 mm) deep galv steel fluted floor units.

B. **Concrete —** Min 2-1/2 in. (64 mm) thick reinforced lightweight or normal weight (100150 pcf or 1600-2400 kg/m^3) structural concrete, as measured from the top plane of the floor units.
The hourly fire rating of the floor assembly shall be equal or greater than the hourly fire rating of the wall assembly.

1A. **Floor Assembly —** As an alternate to Item 1,the fire-rated fluted steel deck/concrete floor assembly shall be constructed of the materials and in the manner described in the individual D700 Series Floor-Ceiling Design in the UL Fire Resistance Directory and shall include the following construction features:

A. **Steel Floor and Floor Units*** — Max 3 in. (76 mm) deep galv steel fluted floor units.

B. **Concrete** — Min 2-1/2 in. (64 mm) thick reinforced lightweight or normal weight (100-150 pcf or 1600-2400 kg/m^3) structural concrete, as measured from the top plane of the floor units.

C. **Spray-Applied Fire Resistive Material*** — Prior to the installation of the joint system (Item 3) all surfaces of the steel floor units to be sprayed with the thickness of material specified in the individual D700 Series Design.
ISOLATEK INTERNATIONAL — Type 300

GCP APPLIED TECHNOLOGIES INC — Type MK-6/HY, MK-6/HY ES, RG and MK-6S

1B. **Roof Assembly — (Not Shown)** — As an alternate to Items 1 and 1A, a fire-rated fluted steel deck roof assembly may be used. The roof assembly shall be constructed of the materials and in the manner described in the individual P900 Series Roof-Ceiling Design in the UL Fire Resistance Directory. The hourly rating of the roof assembly shall be equal to or greater than the hourly rating of the wall assembly. The roof assembly shall include the following construction features:

A. **Steel Roof Deck** — Max 3 in. (76 mm) deep galv steel fluted roof deck.

B. **Roof Insulation** — Min 2-1/4 in. (57 mm) thick poured insulating concrete, as measured from the top plane of the roof deck.

1C. **Roof Assembly** — As an alternate to Items 1, 1A, and 1B, a fire rated protected fluted steel deck roof assembly may be used. The roof assembly shall be constructed of the materials and in the manner described in the individual P700 Series Roof-Ceiling Design in the UL Fire Resistance Directory. The hourly rating of the roof assembly shall be equal to or greater than the hourly rating of the wall assembly. The roof assembly shall include the following construction features:

A. **Steel Roof Deck** — Max 3 in. (76 mm) deep galv steel fluted roof deck.

B. **Roof Insulation** — As specified in the individual P700 Series Design.

C. **Spray - Applied Fire Resistive Materials*** — (Not Shown)—Prior to the installation of the joint system (Item 3), the roof assembly shall be sprayed with the type and thickness of fire resistive material indicated in the individual P700 Series design.
ISOLATEK INTERNATIONAL — Type 300

GCP APPLIED TECHNOLOGIES INC — Type MK-6/HY, MK-6/HY ES, RG and MK-6S.

2. **Wall Assembly** — Min 6 in. (152 mm) thick reinforced lightweight or normal weight (100150 pcf or 1600-2400 kg/m^3) structural concrete. Wall may also be constructed of any UL Classified **Concrete Blocks***. For Joint Configuration B, wall to be centered beneath valley of fluted steel floor or roof deck.

See **Concrete Blocks*** (CAZT) category in the Fire Resistance Directory for names of manufacturers.

For Joint Configuration A, the hourly assembly rating of the joint system is equal to the hourly fire rating of the wall assembly. For Joint Configuration B, the max assembly rating of the joint system is 2 hr.

3. **Joint System — For unprotected steel floors units or roof decks (D900 or P900 Series Designs), max separation between bottom of floor or roof and top of wall (at time of installation of joint system) is 2 in. (51 mm). For protected steel floors units or roof decks (D700 or P700 Series Designs), max separation between bottom of spray-applied fire resistive material and top of wall (at time of installation of joint system) is 1 in. (25 mm). The joint system is designed to accommodate a max 25 percent compression or extension from it's installed width. The hourly assembly rating of the joint system is dependent upon the joint configuration and the max hourly fire rating of the wall assembly. When Joint Configuration B is used, max Assembly Rating of joint system is 2 hr.** The joint system shall consist of the following:

Joint Configuration A

A. **Forming Material*** — Min 6 or 6-5/8 in. (152 or 168 mm) thickness of 4 pcf (64 kg/m^3) mineral wool batt insulation, for 2 and 3 hr rated assemblies, respectively, cut to the shape of the fluted deck, approx 25 percent larger than the area of the flutes and compressed into the flutes of the steel floor units, roof deck or spray-applied fire resistive material. Additional min 6 or 6-5/8 in. (152 or 168 mm) wide sections of mineral wool batt insulation, for 2 and 3 hr rated assemblies, respectively, are compressed 50 percent in thickness and installed cut edge first to fill the gap between the top of the wall and bottom of the steel floor units, roof deck or spray-applied fire resistive material. The forming material shall be installed flush with both surfaces of the wall.
INDUSTRIAL INSULATION GROUP L L C — MinWool-1200 Safing

JOHNS MANVILLE — Safing

ROCK WOOL MANUFACTURING CO — Delta Safing Board

ROCKWOOL MALAYSIA SDN BHD — SAFE

ROCKWOOL — SAFE

THERMAFIBER INC — SAF

A1. **Spray-Applied Fire Resistive Material* (Not Shown) —** As an alternate to the forming material (Item 3A) within the flutes, min 6 or 6-5/8 in. (152 or 168 mm) depth of spray-applied fire resistive material, for 2 and 3 hr rated assemblies, respectively, installed into the flutes of the steel floor, roof deck or spray-applied fire resistive material. Material shall be excluded from the max 2 in. (51 mm) wide joint immediately above the top of the concrete wall. The spray-applied fire resistive material is mixed with water in accordance with the mixing instructions on the bag and is sprayed and/or troweled to completely fill the opening above the wall. The min average density of the spray applied fire resistive material shall be 15 pcf (240 kg/m^3) with a min individual density of 14 pcf (224 kg/m^3). See Design Information of Volume 1 of the Fire Resistance Directory for method of density determination.
ISOLATEK INTERNATIONAL — Type 300

GCP APPLIED TECHNOLOGIES INC — Type MK-6/HY, MK-6/HY ES, RG, MK-6S, Z-106/G, Z106, Z106-HY and Z-146.

A2. **Forming Material* - Plugs —** (Not Shown) As an alternate to the forming material and spray-applied fire resistive material (Items 3A and 3A1), mineral wool plugs preformed to the shape of the fluted floor units, may be used within the flutes. Plugs shall be friction fitted to completely fill the flutes, flush with wall surfaces. Additional forming material, described in Item 3A, to be used in conjunction with the plugs to fill the gap between the top of concrete wall and bottom of steel floor units, roof deck or spray-applied fire resistive material. **Plugs to be used in max 2 hr fire rated wall assemblies.**
ROCK WOOL MANUFACTURING CO — Delta Deck Plugs

B. **Fill, Void or Cavity Material* — Sealant —** Min 1/8 in. (3 mm) wet thickness of fill material spray or brush applied on each side of the wall in the flutes of the steel floor units or roof deck and between the top of the wall and the bottom of the steel floor units or roof deck and overlap a min 1/2 in. (13 mm) onto concrete wall and steel floor units, roof deck or spray-applied fire resistive material on both sides of wall. When optional through penetrant (Item 4) is used, fill material to overlap a min of 1/2 in. (13 mm) onto conduit or EMT on both sides of wall.
RECTORSEAL — FlameSafe FS3000 Spray, Metacaulk 1200, 1500 or Biostop 750, 800 Spray

Joint Configuration B

A. **Forming Material* —** Min 4 pcf (64 kg/m^3) density mineral wool batt insulation cut into strips with a width equal to the overall thickness of the wall. Strips are compressed 50 percent in thickness and installed cut edge first to fill the gap between the top of the wall and the bottom of the steel floor units, roof deck or spray-applied fire resistive material. The forming material shall be installed flush with both surfaces of the wall.
INDUSTRIAL INSULATION GROUP L L C — MinWool-1200 Safing

JOHNS MANVILLE — Safing

ROCK WOOL MANUFACTURING CO — Delta Safing Board

ROCKWOOL MALAYSIA SDN BHD — SAFE

ROCKWOOL — SAFE

THERMAFIBER INC — SAF

B. **Fill, Void or Cavity Material* — Sealant —** Min 1/8 in. (3 mm) wet thickness of fill material spray or brush applied on each side of the wall to completely cover the mineral wool forming material and to overlap a min 1/2 in. (13 mm) onto concrete wall and steel floor units, roof deck or spray-applied fire resistive material on both sides of wall.
RECTORSEAL — FlameSafe FS3000 Spray, Metacaulk 1200, 1500 or Biostop 750, 800 Spray

4. **Through Penetrant —** (Optional, Not Shown) — Max 1-1/2 in. (38 mm) diam steel conduit or steel electrical metallic tubing (EMT) may be installed parallel with and within the flutes of the steel floor or roof deck when Joint Configuration A is used. The conduit or EMT shall be located near the mid-depth of the steel deck with a clearance of 1/2 to 1-1/2 in. (13 to 38 mm) between the conduit or EMT and the steel deck. Conduit or EMT to be rigidly supported on both sides of the wall assembly. A max of one conduit or EMT is permitted in an individual flute. **When a conduit or EMT is installed in the flute of the steel deck, the max assembly rating of the joint system is 2 hr.**

*,+ Indicates such products shall bear the UL or cUL Certification Mark for jurisdictions employing the UL or cUL Certification (such as Canada), respectively.

Reprinted from the Online Certifications Directory with permission from UL. ©UL LLC