CAN/ULC S115
F Rating — 1 Hr
FT Ratings — 0
FH Rating — 0 or 1 Hr (See Item 3)
FTH Ratings — 0
L Rating at Ambient — Less Than 5.1 L/s/m²
L Rating At 204°C — Less Than 5.1 L/s/m²

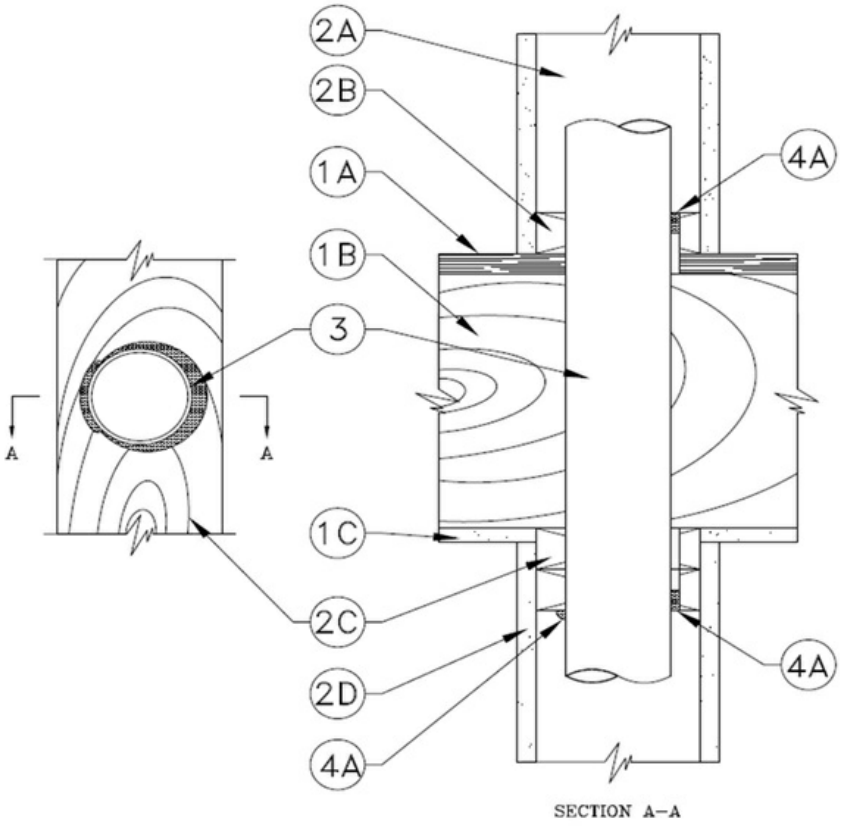

SECTION A–A

System tested with a pressure differential of 50 Pa between the exposed and the unexposed surfaces with the higher pressure on the exposed side.

1. **Floor - Ceiling Assembly —** The 1 hr fire rated wood truss of combination wood and steel truss floor-ceiling assembly shall be constructed of the materials and in the manner described in the individual L500 series Floor-Ceiling design in the UL Fire Resistance Directory and shall include the following construction features, as summarized below:

A. **Flooring System —** Lumber or plywood subfloor with finish floor of lumber, plywood or**Floor Topping Mixture*** as specified in the individual Floor-Ceiling Design. Max diam of floor opening is 127 mm (5 in.).

B. **Joists —** Nom 254 mm (10 in.) deep (or deeper) lumber, steel or combination lumber and steel joists, trusses or**Structural Wood Members*** with bridging as required and with ends firestopped. For Wood Joists, nom 51 by 254 mm (2 by 10 in.) lumber joists spaced 406 mm (16 in.) OC with nom 25 by 76 mm (1 by 3 in.) lumber bridging and with ends firestopped.

C. **Gypsum Board* —** Nom 16 mm (5/8 in.) thick as specified in the individual Floor-Ceiling Design. Wallboard secured to joists as specified in the individual Floor-Ceiling Design. Max diam of floor opening is 127 mm (5 in.).

2. **Chase Wall —** The through penetrant (Item 3) shall be routed through a 1 hr fire-rated or non-rated single, double or staggered wood

stud/gypsum board chase wall constructed of the materials and Partition design in the UL Fire Resistance Directory and shall include the following construction features:

A. **Studs —** Nom 51 by 102 mm (2 by 4 in.) or nom 51 by 152 mm (2 by 6 in.) or double nom 51 by 102 mm (2 by 4 in.) lumber studs.

B. **Sole Plate —** Nom 51 by 102 mm (2 by 4 in.) or nom 51 by 152 mm (2 by 6 in.) or parallel 51 by 102 mm (2 by 4 in.) lumber plates, tightly butted. Diam of opening or length of notch-out in sole plate to be 13 mm (1/2 in.) larger than outside diam of pipe.

C. **Top Plate —** The double top plate shall consist of two nom 51 by 102 mm (2 by 4 in.) or nom 51 by 152 mm (2 by 6 in.) or two sets of parallel 51 by 102 mm (2 by 4 in.) lumber plates, tightly butted. Max. diam of opening is 127 mm (5 in.). Diam of opening in top plate to be 13 mm (1/2 in.) larger than outside diam of pipe.

D. **Gypsum Board —** Min 13 mm (1/2 in.) thick rated or non-rated gypsum board as specified in the individual Wall and Partition Design.

3. **Through Penetrants —** One nonmetallic pipe to be centered within the firestop system. The annular space between pipe and periphery of opening shall be min 0 mm (0 in. (point contact)) to max 13 mm (1/2 in.). Pipe to be rigidly supported on both sides of floor assembly. The following types and sizes of nonmetallic pipes may be used:

A. **Polyvinyl Chloride + (PVC) Pipe —** Nom 102 mm (4 in.) Schedule 40 solid or cellular core PVC pipe for use in closed (process or supply) or vented (drain, waste or vent) piping systems.

B. **Polyvinyl Chloride-XFR (PVC-XFR) Pipe —** Nom 76 mm (3 in.) diam (or smaller) Schedule 40 PVC-XFR pipe for use in closed (process or supply) or vented (drain, waste or vent) piping systems.

C. **Acrylonitrile Butadiene Styrene (ABS) Pipe —** Nom 102 mm (4 in.) diam (or smaller) Schedule 40 cellular or solid core ABS pipe for use in closed (process or supply) or vented (drain, waste or vent) piping system.

D. **Chlorinated Polyvinyl Chloride + (CPVC) Pipe —** Nom 102 mm (4 in.) diam (or smaller) SDR 13.5 CPVC pipe for use in closed (process or supply) piping systems.

E. **Chlorinated Polyvinyl Chloride (CPVC) Pipe —** Nom 51 mm (2 in.) diam (or smaller) Blazemaster® SDR 11 or SDR 13.5 CPVC pipe for use in closed (process or supply) piping systems.

F. **Chlorinated Polyvinyl Chloride (CPVC) Pipe —** Nom 51 mm (2 in.) diam (or smaller) AquaRise® SDR 11 CPVC pipe for use in closed (process or supply) piping systems.

G. **Chlorinated Polyvinyl Chloride (CPVC) Pipe —** Nom 51 mm (2 in.) diam (or smaller) FlowGuard Gold® SDR 11 CPVC pipe for use in closed (process or supply) piping systems.

H. **Rigid Nonmetallic Conduit+ (RNC) —** Nom 102 mm (4 in.) diam (or smaller) Schedule 40 PVC conduit installed in accordance with the National Electrical Code (NFPA No. 70).

I. **Electrical Nonmetallic Tubing+ (ENT) —** Nom 51 mm (2 in.) diam (or smaller) Schedule 40 PVC conduit installed in accordance with the National Electrical Code (NFPA No. 70).

J. **Crosslinked Polyethylene (PEX) tubing —** Nom 51 mm (2 in.) diam (or smaller) SDR 9 tube used for closed (process or supply) or vented (drain, waste or vent) piping systems.

+Penetrants A, D, H & I are limited to CAN/ULC - S115 0 hr FH and FTH Ratings.

Note: When chase wall is constructed of nom 51 by 102 mm (2 by 4 in.) studs, through penetrants are restricted to nom 51 mm (2 in.) diam (or smaller).

4. **Firestop System —** The firestop system shall consist of the following:

A. **Fill, Void or Cavity Material* — Sealant —** Min 19 mm (3/4 in.) thickness of sealant applied within annular space around perimeter of through penetrant (Item 3), flush with top surface of floor or sole plate and flush with bottom surface of top plate. Min 13 mm (1/2 in.) diam bead of caulk applied at point contact locations at penetrant/floor or sole plate interface on top surface of the assembly and at penetrant/ceiling or top plate interface on the bottom surface of the assembly.

RECTORSEAL — Metacaulk 1000, Metacaulk 350i

*** Indicates such products shall bear the UL or cUL Certification Mark for jurisdictions employing the UL or cUL Certification**

(such as Canada), respectively.