F Rating — 2 Hr
T Rating — 0 Hr

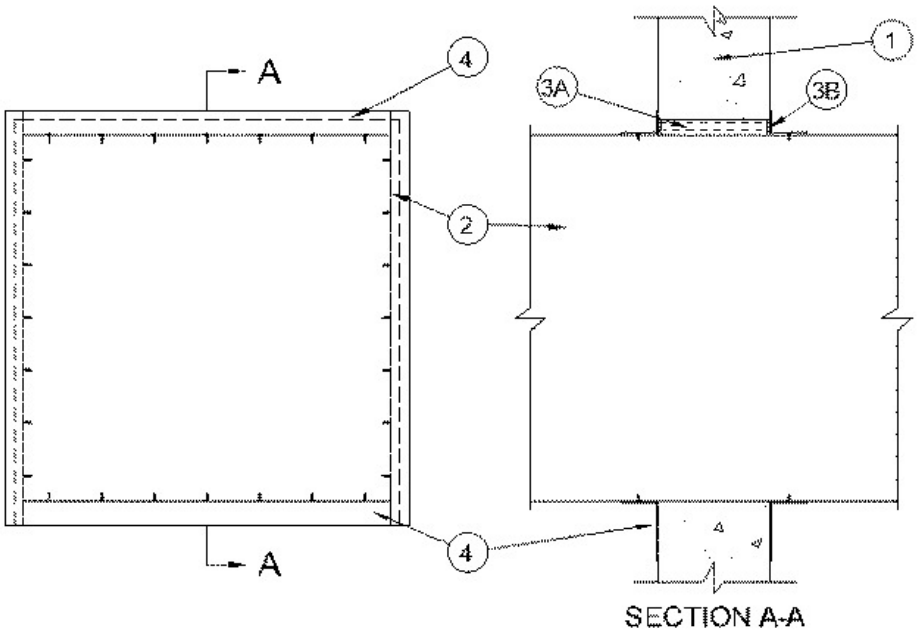

SECTION A-A

1. **Wall Assembly —** Min 4-1/2 in. (114 mm) thick reinforced lightweight or normal weight (100-150 pcf or 1600-2400 kg/m^3) concrete. Wall may also be constructed of any UL Classified **Concrete Blocks***. Max size of opening is 484 sq in. (0.31 m^2) with a max dimension of 22 in. (559 mm).

See **Concrete Blocks** (CAZT) category in the Fire Resistance Directory for names of manufacturers.

2. **Steel Duct —** Max 21 by 21 in. (533 by 533 mm) No. 24 gauge (or heavier) steel duct to be installed concentrically or eccentrically within the opening. The annular space shall be min 0 in. (point contact) to max 1 in. (25 mm). Duct to be rigidly supported on both sides of wall assembly.

3. **Firestop System —** The firestop system shall consist of the following:

A. **Packing Material —** Min 4 in. (102 mm) thickness of min 4 pcf (64 kg/m^3) mineral wool batt insulation firmly packed into opening as a permanent form. Packing material to be recessed from both surfaces of wall to accommodate the required thickness of fill material.

B. **Fill, Void or Cavity Material* — Caulk —** Min 1/2 in. (13 mm) thickness of fill material applied within the annulus, flush with both surfaces of wall. At point contact location, a min 1/4 in. (6 mm) diam bead of fill material shall be applied to the wall/duct interface on both surfaces of the wall.

RECTORSEAL — Metacaulk 350i

4. **Steel Retaining Angles —** Nom 2 by 2 in. (51 by 51 mm) by No. 22 gauge (or heavier) steel angles attached to all four sides of duct on both sides of wall. The angles shall be attached to the duct with No. 8 (or larger) sheet metal screws spaced max 2 in. (51 mm) from each end of duct and spaced a max of 5 in. (127 mm) OC.

*,+ Indicates such products shall bear the UL or cUL Certification Mark for jurisdictions employing the UL or cUL Certification (such as Canada), respectively.

Reprinted from the Online Certifications Directory with permission from UL. ©UL LLC