F Ratings — 1 and 2 Hr (See Item 1)
T Rating — 0 Hr

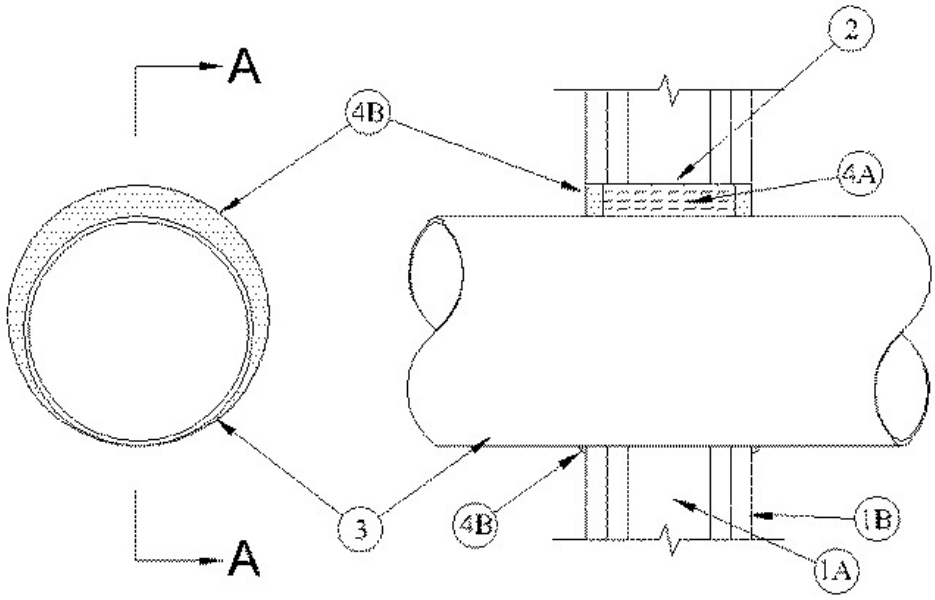

SECTION A-A

1. **Wall Assembly —** The 1 or 2 hr fire-rated gypsum wallboard/stud wall assembly shall be constructed of the materials and in the manner specified in the individual U400 or V400 Series Wall and Partition Designs in the UL Fire Resistance Directory and shall include the following construction features:

A. **Studs —** Wall framing consists of min 2-1/2 in. (64 mm) wide steel studs spaced max 24 in. OC (610 mm). Additional framing members to be installed in stud cavity containing the duct such that the framed opening is 4 to 6 in. (102 to 152 mm) larger in width and height than diam of duct.

B. **Gypsum Board* —** The gypsum board type, thickness, number of layers and orientation shall be, as specified in the individual Wall and Partition Design. Max diam of opening is 17 in. (432 mm) with the opening being concentric with the framed opening.

The hourly F Rating of the firestop system is equal to the hourly fire rating of the wall in which it is installed.

2. **Steel Wire Mesh —** Cylindrical sleeve fabricated from No. 8 steel wire mesh and having a min 1 in. (25 mm) lap along the longitudinal seam. Length of steel mesh to be equal to thickness of wall. Steel wire mesh to be formed to fit periphery of through opening.

3. **Steel Duct —** Nom 16 in. (406 mm) diam (or smaller) No. 26 gauge (or heavier) steel duct to be installed concentrically or eccentrically within the opening. The annular space shall be min 0 in. (point contact) to max 1 in. (25 mm). Duct to be rigidly supported on both sides of wall assembly.

4. **Firestop System —** The firestop system shall consist of the following:

A. **Packing Material —** Min 2-3/4 or 4 in. (70 or 102 mm) thickness of min 4 pcf (64 kg/m^3) mineral wool batt insulation firmly packed into opening as a permanent form for 1 or 2 hr fire rated walls, respectively . Packing material to be recessed from both surfaces of wall to accommodate the required thickness of fill material.

B. **Fill, Void or Cavity Material* - Caulk —** Min 1/2 in. (13 mm) thickness of fill material applied within the annulus, flush with both surfaces of wall. At point contact location, a min 1/4 in. (6 mm) diam bead of fill material shall be applied to the wall/duct interface on both surfaces of the wall.
RECTORSEAL — Metacaulk 350i

*,+ Indicates such products shall bear the UL or cUL Certification Mark for jurisdictions employing the UL or cUL Certification (such as Canada), respectively.

Reprinted from the Online Certifications Directory with permission from UL. ©UL LLC