F Rating — 1 Hr
T Rating — 1 Hr

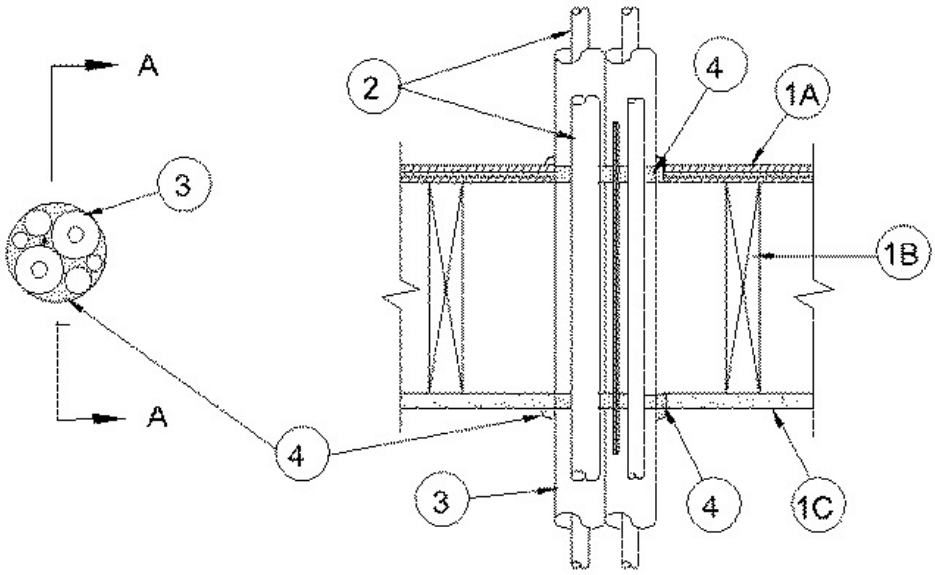

SECTION A-A

1. **Floor-Ceiling Assembly —** The 1 hr fire-rated wood joist floor ceiling assembly shall be constructed of the materials and in the manner specified in the individual L500 Designs in the UL Fire Resistance Directory, as summarized below:

A. **Flooring System —** Lumber or plywood subfloor with finish floor of lumber, plywood or **Floor Topping Mixture*** as specified in the individual Floor-Ceiling Design. Diam of floor opening to be max 1 in. (25 mm) larger than diam of bundled penetrants.

B. **Wood Joists —** Nom 10 in. (254 mm) deep (or deeper) lumber, steel or combination lumber and steel joists, trusses or **Structural Wood Members*** with bridging as required and with ends firestopped.

C. **Gypsum Board* —** Nom 5/8 in. (16 mm) thick as specified in the individual Floor-Ceiling Design. Diam of opening to be max 1 in. (25 mm) larger than diam of bundled penetrants.

1A. **Chase Wall —** (Optional, Not Shown) — The through penetrants (Item 2) may be routed through a 1 hr fire-rated single, double or staggered wood stud/gypsum board chase wall. Depth of chase wall stud cavity to be min 1/2 in. (13 mm) greater than diameter of opening cut in sole and top plates to accommodate the through penetrant (Item 2). The chase wall shall be constructed of the materials and in the manner specified in the individual U300 Series Wall and Partition Designs in the UL Fire Resistance Directory and shall include the following construction features:

A. **Studs —** Nom 2 by 4 in. (51 by 102 mm), 2 by 6 in. (51 by 152 mm) or double nom 2 by 4 in. (51 by 102 mm) lumber studs.

B. **Sole Plate —** Nom 2 by 4 in. (51 by 102 mm), 2 by 6 in. (51 by 152 mm) or parallel 2 by 4 in. (51 by 102 mm) lumber plates, tightly butted. Diam of opening to be max 1 in. larger than diam of bundled penetrants.

C. **Top Plate —** The double top plate shall consist of two nom 2 by 4 in. (51 by 102 mm), two nom 2 by 6 in. (51 by 152 mm) or two sets of parallel 2 by 4 in. (51 by 102 mm) lumber plates, tightly butted. Diam of opening to be max 1 in. (25 mm) larger than diam of bundled penetrants.

D. **Gypsum Board* —** Thickness, type, number of layers and fasteners shall be as specified in the individual Wall and Partition Design.

2. **Through Penetrants —** Max 3-1/2 in. (89 mm) diam bundle of pipes, conduits, tubing and/or cable to be installed within the opening. At top of assembly, bundled penetrants to be installed either concentrically or eccentrically within the opening with an annular space of min 0 in. (point contact) to max 1 in. (25 mm). At bottom of assembly, bundled penetrants to be installed either concentrically or eccentrically within the opening with an annular space of min 0 in. (point contact) to max 1 in. Penetrants to be rigidly supported on both sides of the floor-ceiling assembly. The following types and quantity of penetrating items shall be utilized in the opening:

A. **Metallic Penetrants —** A max of two insulated and one uninsulated metallic pipes, conduits or tubing to be installed within the firestop system. The following types and sizes of metallic pipes, conduits or tubing may be used:

A1. **Steel Pipe —** Nom 1-1/4 in. (32 mm) diam (or smaller) Schedule 10 (or heavier) steel pipe.

A2. **Iron Pipe —** Nom 1-1/4 in. (32 mm) diam (or smaller) cast or ductile iron pipe.

A3. **Conduit —** Nom 1-1/4 in. (32 mm) diam (or smaller) steel electrical metallic tubing or steel conduit.

A4. **Copper Tubing —** Nom 3/4 in. (19 mm) diam (or smaller) Type L (or heavier) copper tubing.

A5. **Copper Pipe —** Nom 3/4 in. (19 mm) diam (or smaller) Regular (or heavier) copper pipe.

B. **Nonmetallic Penetrants —** A max of one nonmetallic pipes, conduits or tubing to be installed within the opening. The following types and sizes of nonmetallic pipes, conduits or tubing may be used:

B1. **Polyvinyl Chloride (PVC) Pipe —** Nom 1-1/4 in. (32 mm) diam (or smaller) Schedule 40 solid core or cellular core PVC pipe for use in closed (process or supply) or vented (drain,waste or vent) piping system.

B2. **Chlorinated Polyvinyl Chloride (CPVC) —** Pipe Nom 1-1/4 in. (32 mm) diam (or smaller) SDR 13.5 CPVC pipe for use in closed (process or supply) piping system.

B3. **Rigid Nonmetallic Conduit+ —** Nom 1-1/4 in. (32 mm) diam (or smaller) Schedule 40 PVC conduit installed in accordance with the National Electrical Code (NFPA 70).

B4. **Crosslinked Polyethylene (PEX) —** Tubing Nom 1 in. (25 mm) diam (or smaller) SDR 9 PEX tubing for use in closed (process or supply) or vented (drain, waste or vent) piping systems.

C. **Cables —** A max of two cables to be installed within the opening. The following types and sizes of copper conductor cables may be used:

C1. Max 25 pair No. 24 AWG (or smaller) telephone cable with (PVC) insulation and jacket.

C2. Max 4/C No. 18 AWG (or smaller) thermostat cable with PVC insulation and jacket.

3. **Tube Insulation — Plastics++ —** Nom 1 in. (25 mm) thick acrylonitrile butadiene/polyvinyl chloride (AB/PVC) flexible foam furnished in the form of tubing. Tube insulation to be utilized on a max of one metallic penetrating item (Item 2A).

See **Plastics++** (QMFZ2) category in the Plastics Recognized Component Directory for names of manufacturers. Any Recognized Component tube insulation material meeting the above specifications and having a UL 94 Flammability Classification of 94-5VA may be used.

4. **Fill, Void or Cavity Material* — Caulk —** Min 3/4 in. (19 mm) thickness of fill material applied within the annulus, flush with top surface of subfloor or sole plate. Min 5/8 in. (16 mm) thickness of caulk installed within the annulus, flush with lower surface of gypsum board ceiling or lower top plate. Caulk to be forced into interstices of penetrants to max extent possible. At point contact locations, min 1/2 in. (13 mm) diam bead of caulk applied at penetrant/plywood or sole plate interface and at penetrant/ceiling or lower top plate interface.

RECTORSEAL — Metacaulk 350i

++Bearing the UL Recognized Component Marking.

*,+ Indicates such products shall bear the UL or cUL Certification Mark for jurisdictions employing the UL or cUL Certification (such as Canada), respectively.

Reprinted from the Online Certifications Directory with permission from UL. ©UL LLC