ANSI/UL1479 (ASTM E814)	CAN/ULC S115
F Rating — 2 Hr	F Rating — 2 Hr
T Rating — 1/2 Hr	FT Rating — 1/2 Hr
	FH Rating — 2 Hr
	FTH Rating — 1/2 Hr

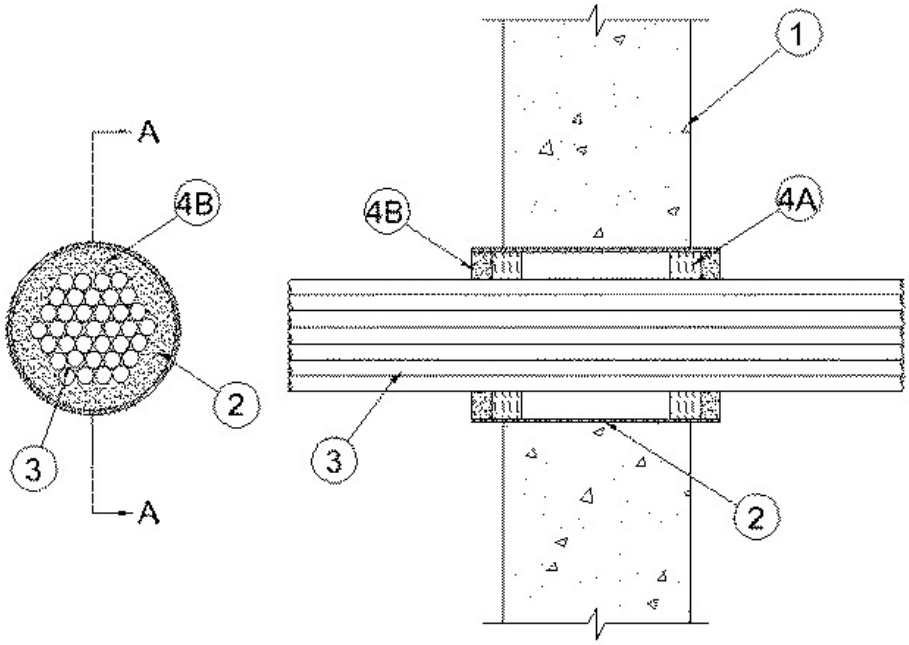

SECTION A-A

1. **Wall Assembly —** Min 5 in. (127 mm) thick reinforced lightweight or normal weight (100-150 pcf or 1600-2400 kg/m^3) concrete. Wall may also be constructed of any UL Classified **Concrete Blocks*.** Max diam of opening is 4-1/2 in. (114 mm). See **Concrete Blocks** (CAZT) category in the Fire Resistance Directory for names of manufacturers.

2. **Steel Sleeve —** Nom 4 in. (102 mm) diam (or smaller) Schedule 40 steel sleeve cast into wall assembly with hydraulic cement. Length of sleeve to be equal to thickness of wall plus 4 in. such that, when installed, the ends of the sleeve project 2 in. (51 mm) beyond each side of the wall.

3. **Cables —** Max 25 pair No. 24 AWG (or smaller) polyvinyl chloride (PVC) insulated and jacketed telephone cable. Aggregate cross-sectional areas of cables to be max 25 percent of the cross-sectional area of the opening. cables to be rigidly supported on both sides of wall assembly.

4. **Firestop System —** The firestop system shall consist of the following:

A. **Packing Material —** Min 2 in. (51 mm) thickness of min 4 pcf (64 kg/m^3) mineral wool batt insulation firmly packed into opening as a permanent form. Packing material to be forced into interstices of cable group to max extent possible. Packing material to be recessed from both surfaces of wall to accommodate the required thickness of fill material.

B. **Fill, Void or Cavity Material* — Sealant —** Min 1 in. (25 mm) thickness of fill material applied within the annulus, flush with ends of steel sleeve. Fill material to be forced into interstices of cable group to max extent possible. A min 1/2 in. (13 mm) thick bead shall be applied at the steel sleeve/concrete interface on both surfaces of wall.
RECTORSEAL — FlameSafe FS 1900, Metacaulk 1000, Metacaulk 350i, Biostop 350i or Biostop 500+

*,+ Indicates such products shall bear the UL or cUL Certification Mark for jurisdictions employing the UL or cUL Certification (such as Canada), respectively.

Reprinted from the Online Certifications Directory with permission from UL. ©UL LLC