F Rating — 2 Hr
T Rating — 1 Hr

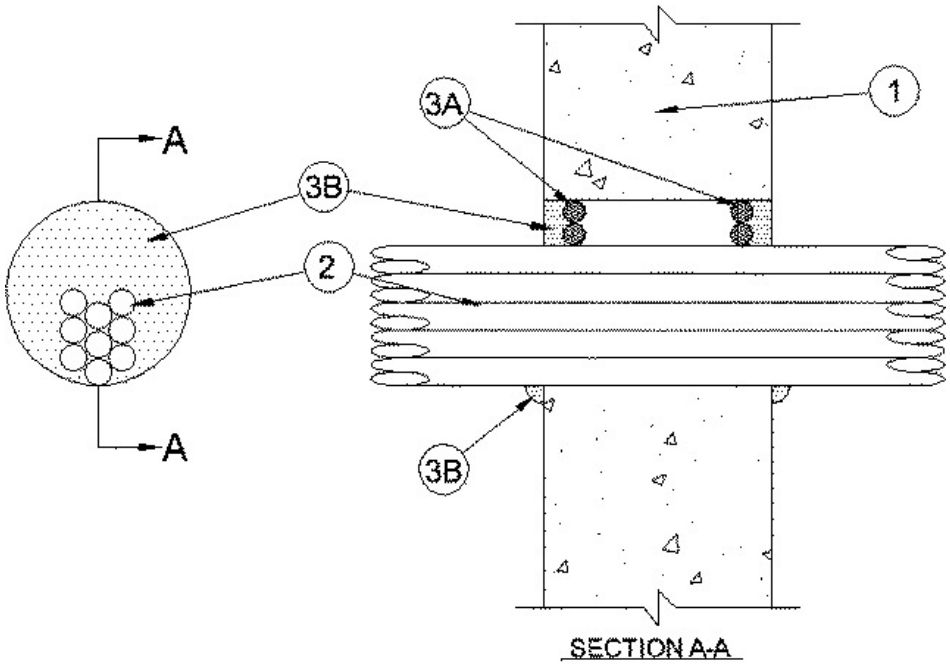

1. **Wall Assembly —** Min 6 in. thick lightweight or normal weight (100-150 pcf) concrete. Wall may also be constructed of any UL Classified **Concrete Blocks*.** Max diam of opening is 3-5/8 in.

See **Concrete Blocks*** (CAZT) category in the Fire Resistance Directory for names of manufacturers.

2. **Cables —** Aggregate cross-sectional area of cables to be min 11 percent to max 34 percent of the aggregate cross-sectional area of the opening. The annular space between the cable and the periphery of opening shall be min 0 in. (point contact) to max 2-1/8 in. Cables to be rigidly supported on both sides of wall assembly. Any combination of the following types and sizes of cables may be used:

A. Max 3/C No. 12 AWG MC (BX) cable with polyvinyl chloride (PVC) insulation.

B. Max 3/C No. 8 AWG (or smaller) nonmetallic sheathed (Romex) cable with copper conductors, PVC insulation and jacket .

C. Max 25 pair No. 20 AWG (and smaller) copper conductor cable with XLPE/PVC insulation, with or without PVC jacket.

3. **Firestop System —** The firestop system shall consist of the following:

A. **Packing Material —** Foam backer rod firmly packed into opening as a permanent form. Packing material to be recessed from both surfaces of wall as required to accommodate the required thickness of fill material.

B. **Fill, Void or Cavity Material* - Caulk —** Min 1/2 in. thickness of fill material applied within the annulus, flush with both surfaces of wall. A min 1/2 in. diam bead of caulk shall be applied to the cable/concrete interface at the point contact location on both sides of wall.

RECTORSEAL — Metacaulk 1000

*,+ Indicates such products shall bear the UL or cUL Certification Mark for jurisdictions employing the UL or cUL Certification (such as Canada), respectively.

Reprinted from the Online Certifications Directory with permission from UL. ©UL LLC