ANSI/UL1479 (ASTM E814)	CAN/ULC S115
F Rating — 2 Hr	F Rating — 2 Hr
T Rating — 3/4, 1-1/2 hr	FT Rating —3/4, 1-1/2 Hr (see Item 2)
	FH Rating — 2 Hr
	FTH Rating —3/4, 1-1/2 Hr (see Item 2)

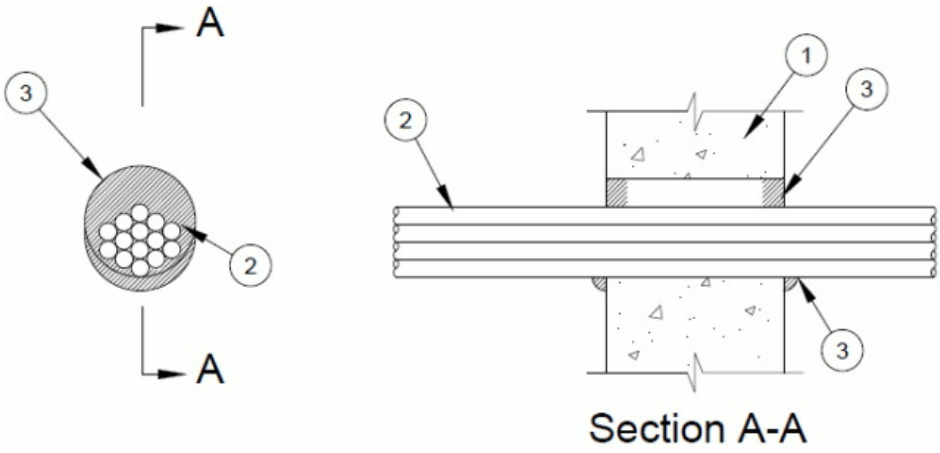

Section A-A

1. **Wall Assembly —** Min 6 in. (152 mm) thick reinforced lightweight or normal weight (100~~-~~150 pcf or 1600-2400 kg/m^3) concrete wall. Wall may also be constructed of any UL Classified Concrete Blocks*. Max diam of opening is 4 in. (102 mm).
See **Concrete Blocks** (CAZT) category in the Fire Resistance Directory for names of manufacturers.

2. **Cables —** Aggregate cross-sectional area of cables to be min 20 percent to max 45 percent of the aggregate cross-sectional area of the opening or a 1 in. (25.4 mm) to max 3 in. (76 mm) diameter cable bundle. Cables to be tightly bundled and rigidly supported on both sides of wall assembly. The annular space between the cables and the periphery of opening shall be min 0 in. (point contact) to max 2 in. (51 mm). Any combination of following types and sizes of copper conductor cables may be used:

A. Max 2/C No. 18 AWG copper conductor thermostat cable with polyvinyl chloride (PVC) insulation and jacket materials.

B. Max 4 pair No. 24 AWG copper conductor Cat5e or Cat 6 telephone cable with PVC insulation and jacket materials.

C. Max RG/U (or smaller) coaxial cable with foam high density polyethylene insulation and PVC jacket materials.

D. Max 3/C (with ground) No. 14 AWG (or smaller) nonmetallic sheathed (Romex) cable with PVC insulation and jacket materials.

E. Max 1/C No. 8 AWG copper conductor cable with PVC insulation and nylon jacket materials.

F. Max 1/C No. 750 kcmil copper conductors with PVC insulation and fabric jacket materials

G. Max 48MM62.5 micron fiber optic cables with having a min FT-6 rating.

H. Max 62.5/125 micron fiber optic cables with having a min Riser rating

I. Max 1/C 3/0 AWG copper conductor cable with PVC insulation and jacket materials.

J. Max three copper conductors (with ground) No. 12 AWG **Metal Clad Cable+**.

K. Max four copper conductors No. 2 AWG **Metal Clad Cable+**.
AFC CABLE SYSTEMS INC

L. Max 1/C 2/0 AWG non halogen copper conductor cable.

M. Max 300 pair No. 24 AWG copper conductor telephone cable with PVC insulation and jacket materials.

N. Max 30 pair No. 22 copper conductor shielded switchboard cable with PVC insulation and jacket materials.

O. Max RG/6 (or smaller) coaxial cable with fluorinated ethylene (FE) or PVC insulation and jacket materials.

P. Max RG/U (or smaller) coaxial cable with fluorinated ethylene (FE) or PVC insulation and jacket materials.

Q. Max 7/C No. 12 AWG copper conductors with PVC insulation and jacket materials.

R. Max 4 pair No. 23 AWG copper conductor Cat 6 telephone cable with PVC insulation and jacket materials.

S. Max three copper conductors (with ground) No. 12 AWG steel **Armored Cable+**.

T. Max 04-02 2 5M fiber optic cables having a max diameter of 0.450 in. (11.4 mm).
The T Rating is limited to 3/4 hour if cables F, M, N, I and L are installed.

3. **Fill, Void or Cavity Material* —Putty —** Min 5/8 in. (16 mm) thickness of fill material applied within the annulus, flush with both surfaces of wall. A min 1/2 in. (13 mm) diam crown bead of putty shall be applied at the periphery of the cables in opening interface in addition to the of the putty in the opening on both sides of the wall.
RECTORSEAL — Metacaulk Fire Rated Putty, Biostop Fire Rated Putty

*,+ Indicates such products shall bear the UL or cUL Certification Mark for jurisdictions employing the UL or cUL Certification (such as Canada), respectively.

Reprinted from the Online Certifications Directory with permission from UL. ©UL LLC