ANSI/UL 1479 (ASTM E814)	CAN/ULC S115
F Rating - 2 Hr	F Rating - 2 Hr
T Rating - 0 Hr	FT Rating - 0 Hr
	FH Rating - 2 Hr
	FTH Rating - 0 Hr

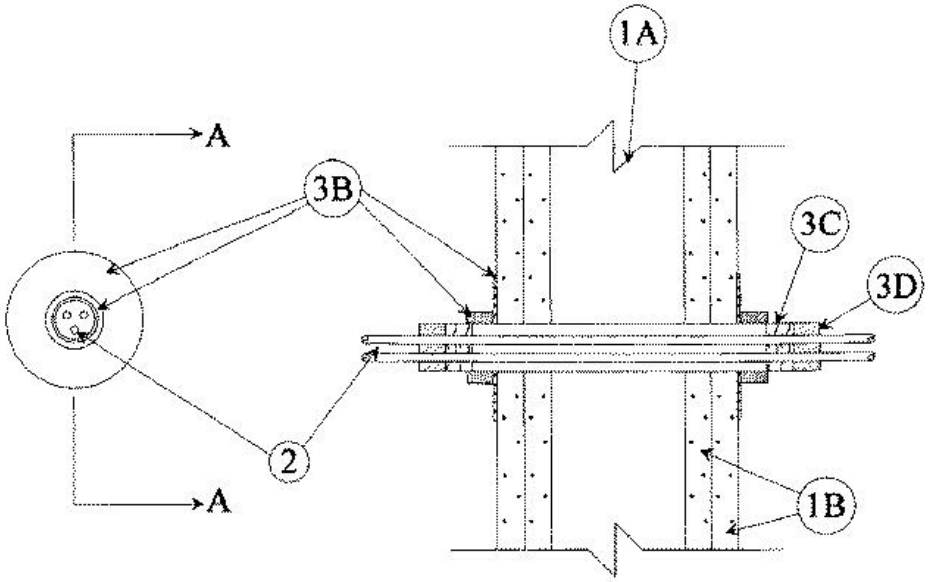

SECTION A-A

1. **Wall Assembly —** The fire-rated gypsum wallboard/stud wall assembly shall be constructed of the materials and in the manner specified in the individual U300, U400, V400 or W400 Series Wall and Partition Designs in the UL Fire Resistance Directory and shall include the following construction features:

A. **Studs —** Wall framing may consist of either wood studs or steel channel studs. Wood studs to consist of nom 2 by 4 in. lumber spaced 16 in. OC. Steel studs to be min 2-1/2 in. (64 mm) wide and spaced max 24 in. (610 mm) OC.

B. **Gypsum Board* —** Two layers of nom 5/8 in. (16 mm) thick gypsum wallboard, as specified in the individual Wall and Partition Design. Max diam of opening is 4-1/2 in. (114 mm).

2. **Cables —** Aggregate cross-sectional area of cables in firestop device to be 36 percent of the aggregate cross-sectional area of device. Cables to be rigidly supported on both sides of wall assembly. Any combination of the following types and sizes of copper conductor cable may be used:

A. Max 300 kcmil single conductor Type MTW, THHN, THWN or AWM power cables; cross-linked polyethylene (XLPE) insulation.

B. Max 4 pair No. 24 AWG telephone cable intended for plenum applications.

C. Max 3/C No. 12 AWG with polyvinyl chloride (PVC) insulation and jacket.

3. **Firestop System —** The firestop system shall consist of the following:

A. **Fill, Void or Cavity Material* — Caulk —** (Not Shown) Min 3/8 in. (10 mm) diam of caulk applied around the perimeter of the opening on each side of the wall.
RECTORSEAL — Metacaulk 1000

B. **Firestop Device —** Smooth firestop device incorporating flat washers secured by sliding compression couplers. Device shall be installed in accordance with the accompanying installation instructions. Device provided in nom 1, 2 and 4 in. (25, 51, 102 mm) sizes. Max diam of opening in wall for 1, 2 and 4 in. (25, 51, 102 mm) sizes are 1-1/8, 2-1/4 and 4-1/2 in., (29, 57, 114 mm) respectively.
UNIQUE FIRE STOP PRODUCTS INC — Smooth Firestop

C. **Packing Material —** Min 1 in. (25 mm) thickness of min 4.0 pcf (64kg/m³) mineral wool batt insulation firmly packed into firestop device as a permanent form. Packing material to be recessed from each end of firestop device as required to accommodate the required thickness of fill material.

D. **Fill, Void or Cavity Material* — Putty —** Min 1 in. (25 mm) thickness of fill material applied within the firestop device, flush with both ends.
RECTORSEAL — Metacaulk Fire Rated Putty

*,+ Indicates such products shall bear the UL or cUL Certification Mark for jurisdictions employing the UL or cUL Certification (such as Canada), respectively.

Reprinted from the Online Certifications Directory with permission from UL. ©UL LLC